PRELIMINARY PLAN
NOT FINAL - SUBJECT TO CHANGE

PROJECT NUMBER	SHEET NO.
NH-30-5(131)	S43

C.N. 31983

STRUCTURE NUMBER
S030 37773L

- COLUMBUS SOUTH BRIDGES -

- NOTES -

This structure is designed in accordance with the AASHTO LRFD Bridge Design Specifications, Eighth Edition.

This structure is located within the Critical Zone of the Columbus Loup River LB Levee. Special requirements for construction are included in the Special Provisions.

The contractor may substitute any one of the alternate designs shown on the plans for the original design. All quantities are based on the original design and no additions or deductions will be allowed for the use of an alternate design.

The concrete bridge deck is designed by the empirical design method.

The girders and substructure are designed for a 3" asphalt overlay of 35 psf.

The superstructure is designed for the allowance of stay-in-place forms (5 psf) between girders.

All structural steel for girder flanges, webs, stiffeners, diaphragms, and all splice materials, shall conform to the requirements of ASTM A709/A709M, Grade 50W weathering steel.

All fasteners shall be 7/8" Φ high strength bolts, ASTM F3125/F3125M, Grade A325, unless otherwise noted.

Nuts, bolts, and washers used in the assembly of weathering steel shall be Type 3.

Butt splices will be permitted for flange or web plates exceeding 60 feet in length. The locations of the splice shall be shown on the shop plans and will be subject to approval by the Engineer.

During girder fabrication, the final camber tolerance shall not exceed those in Table 3.3 of AWS D1.5. "S" is the length of girder between splices.

During girder fabrication, the flanges at the splice must line up within 1/8" of parallel to the adjacent flanges without applying external force, before the splice is drilled.

All bearing stiffeners and girder ends, except at field splices, shall be vertical after final erection. All other stiffeners and all field splices shall be normal to the top flange.

When the entire slab is not expected to be placed in one day, the Contractor may submit an alternate proposed slab pouring sequence to the Bridge Division at the preconstruction conference so that new camber and shims may be calculated.

Field tack welding of form hangers or miscellaneous hardware to any part of the steel girder, with the exception of the shear connectors, shall be prohibited.

When assembling the girders, they shall be set according to the blocking diagram before any bolts are tightened to a snug-tight condition.

Field splices shall be clean and free of all foreign matter before field assembly. The plates shall be in full contact when the bolts are tightened to a snug-tight condition.

The girders for this bridge are not designed to resist any torsional or lateral forces due to temporary construction loads. The Contractor must provide any temporary bracing necessary to support the girder web and flanges against all torsional or lateral forces resulting from construction loads.

7/8" Φ x 0'-6" end welded studs (shear connectors) have an in-place weight of 115.0 lb./100 studs.

Steel (weight) quantities are based upon 490 pcf and 1 lb. per bolt.

Concrete for slab, approach slabs, turndowns, rails, and pier footings shall be Class "47BD", with a 28-day strength of 4,000 psi.

All other cast-in-place concrete shall be Class "47B" concrete with a 28-day strength of 3,000 psi.

Concrete and reinforcing steel for Light Pole Foundations are included in the quantities for "SLAB".

All reinforcing steel shall be epoxy coated and conform to the requirements of ASTM A615/A615M, Grade 60 steel.

The minimum clearance, measured from the face of the concrete to the surface of any reinforcing bar, shall be 3", except where otherwise noted.

Chamfer all exposed edges of concrete.

All structural steel for Expansion Joints shall conform to the requirements of ASTM A709/A709M, Grade 50.

Tie rods shall conform to ASTM A709/A709 M Grade 36. All turnbuckles shall conform to ASTM A668/A668M, Class C.

Structural steel for all pipe piles shall conform to ASTM A252/A252M, Grade 3 with a minimum yield strength of 45,000 psi.

All other structural steel shall conform to the requirements of ASTM A709/A709M, Grade 36.

The Pay Item, "STRUCTURAL STEEL FOR SUBSTRUCTURE", shall include the tie rods at the abutments and nose angles at the piers.

After fabrication, expansion joints, nose angles, tie rods, turnbuckles, and all other hardware shall be galvanized according to ASTM A123/A123M.

All dimensions shown are in horizontal plane only. No allowances have been made for vertical curve or roadway cross slope.

All plastic pipe, galvanized wire screen and miscellaneous drainage items at the abutments shall be considered subsidiary to the Pay Item, "SUBSURFACE DRAINAGE MATTING".

Girder shims that will be provided to the Contractor account for the dead load deflection due to weight of the slab, rail, and 3" asphalt overlay only. The Contractor is responsible for making the necessary adjustments for the particular forming system used to achieve the slab grades and elevations shown on the plans.

The shim shots may be taken before or after the turndowns are poured.

Cotton duck bearing pads, furnished and installed, shall be measured for payments by the each. Payment shall be for the Pay Items, "EXPANSION BEARING, PTFE TYPE" and "FIXED BEARING."

The Pay Item, "STEEL SHEET PILING", includes only the steel sheet piling cast into the abutments.

Unless noted as "Optional" all construction joints shown are mandatory.

Any excavation required for BROKEN CONCRETE RIPRAP below the new channel cross section shall be subsidiary to the Pay Item "BROKEN CONCRETE RIPRAP".

The location of all aerial and underground utility facilities may not be indicated in these plans. The Contractor shall be responsible for coordinating with utilities for location and flagging of all existing facilities, whether indicated in these plans or not.

No excavation will be permitted in the area of underground facilities until all such facilities have been located and identified to the satisfaction of all parties. The excavation must be accomplished with extreme care in order to avoid any possibility of damage to the utilities facility.

Details, quantities, or information for all Group 9 Items contained in these bridge plans are for use "BY OTHERS".

Cost of furnishing and installing the Rail Expansion Joints shall be considered subsidiary to the contract bid price for "FINGER EXPANSION JOINT". Quantity for "FINGER EXPANSION JOINT" (in LF) includes length of finger plate portion and sliding plate portion of joint.

- QUANTITIES -

GROUP 6

ABUTMENT NO. 1 EXCAVATION		1	LS
PIER NO. 1 EXCAVATION		1	LS
PIER NO. 2 EXCAVATION		1	LS
PIER NO. 3 EXCAVATION		1	LS
PIER NO. 4 EXCAVATION		1	LS
PIER NO. 5 EXCAVATION		1	LS
PIER NO. 6 EXCAVATION		1	LS
PIER NO. 7 EXCAVATION		1	LS
PIER NO. 8 EXCAVATION		1	LS
ABUTMENT NO. 2 EXCAVATION		1	LS
CLASS 47B-3000 CONCRETE FOR BRIDGE		1,240.2	CY
ABUTMENTS	256.7 CY		
PIER CAPS & WALLS	983.5 CY		
CLASS 47BD-4000 CONCRETE FOR BRIDGE		3,548.3	CY
SLAB	1,483.0 CY		
HAUNCHES	29.8 CY		
CONCRETE RAILS	281.6 CY		
PIER FOOTINGS	1,753.9 CY		
STEEL SUPERSTRUCTURE AT STATION 409+22.09		1	LS
GIRDERS	1,911,215 LB		
DIAPHRAGMS & MISC.	96,775 LB		
SHEAR CONNECTORS	19,775 LB		
BOLTS	10,305 LB		
TOTAL	2,038,070 LB		
EPOXY COATED REINFORCING STEEL		955,285	LB
SLAB	359,980 LB		
CONCRETE RAILS	134,350 LB		
ABUTMENTS	25,365 LB		
PIERS	435,590 LB		
STRUCTURAL STEEL FOR SUBSTRUCTURE		24,445	LB
STEEL SHEET PILING		4,465	SF
PIPE PILING		##,###	LF
12.75" OUTSIDE DIA.	##,### LF		
16" OUTSIDE DIA., CONCRETE FILLED	##,### LF		
TEST PILE		14	EA
EXPANSION BEARING, PTFE TYPE		32	EA
FIXED BEARING		8	EA
GRANULAR BACKFILL		440	CY
SUBSURFACE DRAINAGE MATTING		90	SY
BROKEN CONCRETE RIPRAP		240	TON
RIPRAP FILTER FABRIC		354	SY
CONCRETE FOR PAVEMENT APPROACHES CLASS 47BD-4000		185.0	CY
SLABS	168.3 CY		
CONCRETE RAILS	16.7 CY		
EPOXY COATED REINFORCING STEEL FOR PAVEMENT APPROACHES		39,225	LB
SLABS	31,615 LB		
CONCRETE RAILS	7,610 LB		
FINGER EXPANSION JOINT		83.0	LF
ACCESS BRIDGE AT STATION 409+22.09		1	LS
TEMPORARY BRIDGE SHORING (ABUT. NO. 1)		1	LS
BRIDGE SHORING (ABUT. NO. 2)		1	LS
1½" DIA. CONDUIT IN BRIDGE		1,392	LF
PEDESTRIAN RAILING (CHAIN LINK TYPE)		1,328	LF
MULTI-LAYER EPOXY POLYMER OVERLAY		1,752	SY
LEVEE MONITORING		1	LS

GROUP 9

PREFORMED WATERPROOFING MEMBRANE TYPE 3	4,394	SY

- INDEX -

GENERAL NOTES, QUANTITIES, & INDEX 1
GENERAL PLAN & ELEVATION 1 2
GENERAL PLAN & ELEVATION 2 3
REMOVALS & SHORING 1 4
REMOVALS & SHORING 2 5
COORDINATE LAYOUT & DATA 1 6
COORDINATE LAYOUT & DATA 2 7
GEOLOGICAL PROFILE & PILE LAYOUT 1 8
GEOLOGICAL PROFILE & PILE LAYOUT 2 9
GEOLOGICAL PROFILE & PILE LAYOUT 3 10
GEOLOGICAL PROFILE & PILE LAYOUT 4 11
PILE NOTES & DATA 12
ABUTMENT 1 PLAN & ELEVATION 13
ABUTMENT 2 PLAN & ELEVATION 14
ABUTMENT, ANCHOR BLOCK, & GRADE BEAM DETAILS 15
ABUTMENT WING DETAILS & BILL OF BARS 16
ABUTMENT RIPRAP AND GRANULAR BACKFILL DETAILS 17
PIER PLAN & ELEVATION 18
PIER REINFORCING DETAILS 1 19
PIER REINFORCING DETAILS 2 20
PIER REINFORCING DETAILS 3 21
PIER DETAILS & BILL OF BARS 22
GIRDER LAYOUT AND ELEVATION 1 23
GIRDER LAYOUT AND ELEVATION 2 24
GIRDER LAYOUT AND ELEVATION 3 25
CAMBER AND BLOCKING DETAILS 26
GIRDER DETAILS 27
BEARING DETAILS 28
TYPICAL SECTION & SLAB DETAILS 29
SLAB REINFORCING PLAN 1 30
SLAB REINFORCING PLAN 2 31
SLAB TURNDOWNS 32
LIGHT POLE FOUNDATION 33
CONCRETE RAIL ON BRIDGE 34
SLAB DETAILS & BILL OF BARS 35
EXPANSION JOINT DETAILS 1 36
EXPANSION JOINT DETAILS 2 37
RAIL ON APPROACH SLAB 1 38
RAIL ON APPROACH SLAB 2 39
PEDESTRIAN RAILING (CHAIN LINK TYPE) 40
APPROACH SLAB DETAILS 41
APPROACH SLAB & RAIL BILL OF BARS 42

Shop plans required for record.
- Stay-In-Place forms
- Temporary Bridge Shoring
- Bridge Shoring

Shop plans required for review:
- Steel Superstructure
- Substructure Steel (Nose Angles & Tie Rods)
- Steel Sheet Piling
- Bearing Devices
- Expansion Joints (Finger Joints & Rail Exp. Joints)
- Pedestrian Railing (Chain Link Type)

Design History

Project/Control Number	Year	Description
278-A-2	1931	Original Construction
8575	---	Shop Plan available
F-BRF-BHF-81-3(103)-4	1984	Other Redeck
30(377.73)	1977	Painting Repair
11525	1984	Shop Plan available
31451	1999	Exp Joint Repair
31982	2009	Bridge Repair
31939	2014	Approach Repair

BURNS McDONNELL

BRIDGE ENGINEER

1,289'-10" 9-SPAN
WELDED PLATE GIRDER BRIDGE
GENERAL NOTES, QUANTITIES & INDEX

LOCATION COLUMBUS SOUTH
SKEW 0°
ROADWAY 28'-0"
DESIGN LIVE LOAD HL-93
DATE JUL 2023
DETAILED BY NMF
CHECKED BY ASF
DESIGNED BY YZ

COUNTY PLATTE
HWY. NO. US 30
REF. POST. 377.73L
STA. 409+22.09

NEBRASKA DEPARTMENT OF TRANSPORTATION - BRIDGE DIVISION

NEBRASKA
Good Life. Great Journey.
DEPARTMENT OF TRANSPORTATION

SPECIAL PLAN NO. 2

BRIDGE DIVISION.
Computer: B713227
User: asferdon
Date: 10-JUL-2023 21:19
File: S030_37773L_CPG

PRELIMINARY PLAN
NOT FINAL - SUBJECT TO CHANGE

PROJECT NUMBER	SHEET NO.
NH-30-5(131)	S44

C.N. 31983
STRUCTURE NUMBER S030 37773L

BRIDGE ENGINEER

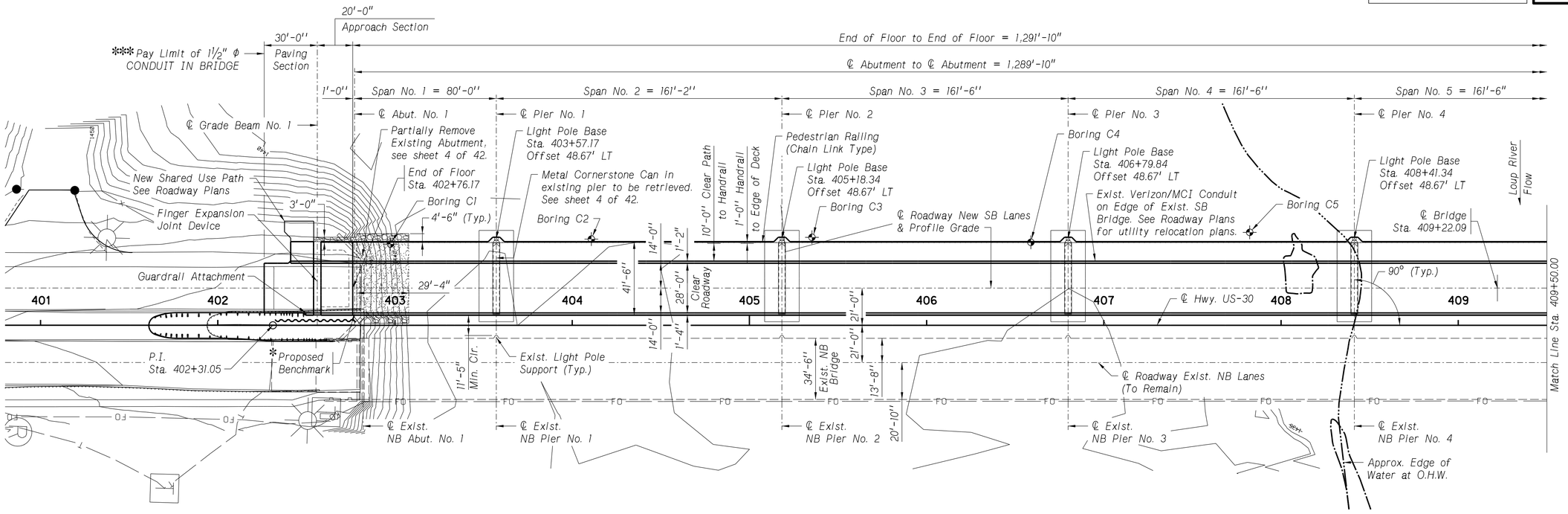

GENERAL PLAN

Scale: 1" = 30'-0"

This structure is located on US 30 across the Loup River in Platte County, Sec. 30-T17N-R1E.

Grade Elevations shown are at the Profile Grade Line. All Grade Elevations shall be to top of concrete.

See Roadway Plans for trail connections to shared use path.

*Proposed Benchmark at ℄ Rail at ℄ Abut. No. 1.

**4'-0" Rail Post with Junction Box. See Sheet 34 of 42.

***1½" Φ Lighting Conduit shall extend to End of Paving Section at a depth of 2'-6" below top of Paving Section. End of conduit shall be capped. See sheets 34 and 39 of 42.

BRIDGE HYDRAULIC INFORMATION

STREAM: LOUP RIVER
D.A. = 15,200 SQ. MI. (TOTAL)
6,530 SQ. MI. (CONTRIBUTING)
Q100 = 138,000 CFS (BASE FLOOD)
Q100 = 84,100 CFS (BRIDGE BASE FLOOD)
H.W. ELEV. = 1446.8 FT (U.S. SIDE)
W.W.A. BELOW H.W. = 14,762 SQ. FT.
Q (17) = 65,000 CFS (OVERTOPPING FLOOD)
LOW ROAD ELEV. = 1443.7 FT
Q (O.H.W.) = 900 CFS
ORDINARY HIGH WATER ELEV. = 1434.6 FT
Q100 GENERAL SCOUR = 6.0 FT
Q100 LOCAL SCOUR = 11.0 FT
Q500 SCOUR ELEV. = 1406.0 FT

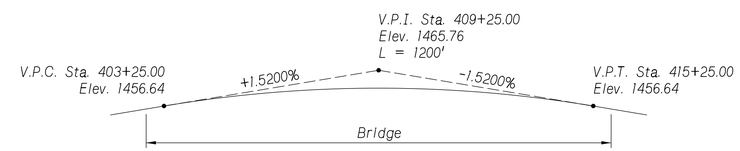

PROFILE GRADE

Not to Scale

TRAFFIC DATA		
YEAR	2024	2044
ADT	14,360	15,555
DHV	1,610	1,745
HEAVY TRUCKS	5%	5%

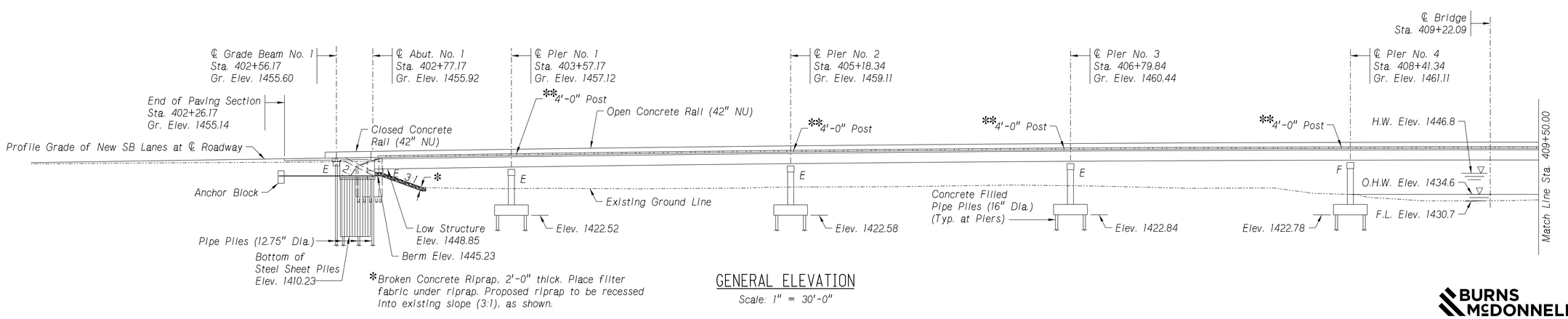

GENERAL ELEVATION

Scale: 1" = 30'-0"

BURNS McDONNELL

1,289'-10" 9-SPAN
WELDED PLATE GIRDER BRIDGE
GENERAL PLAN & ELEVATION 1

COUNTY PLATTE
HWY. NO. US 30
REF. POST. 377.73L
STA. 409+22.09
LOCATION COLUMBUS SOUTH
SKEW 0°
ROADWAY 28'-0"
DESIGN LIVE LOAD HL-93
DESIGNED BY ASF
DETAILED BY TWM
CHECKED BY SDH
DATE JUL 2023

NEBRASKA DEPARTMENT OF TRANSPORTATION - BRIDGE DIVISION

NEBRASKA
Good Life. Great Journey.
DEPARTMENT OF TRANSPORTATION

SPECIAL PLAN NO. 2

BRIDGE DIVISION.
Computer: B713227
User: asferdon
Date: 10-JUL-2023 21:51
File: S030_37773L_CPG

PRELIMINARY PLAN
NOT FINAL - SUBJECT TO CHANGE

PROJECT NUMBER	SHEET NO.
NH-30-5(131)	S45

C.N. 31983
STRUCTURE NUMBER S030 37773L

BRIDGE ENGINEER

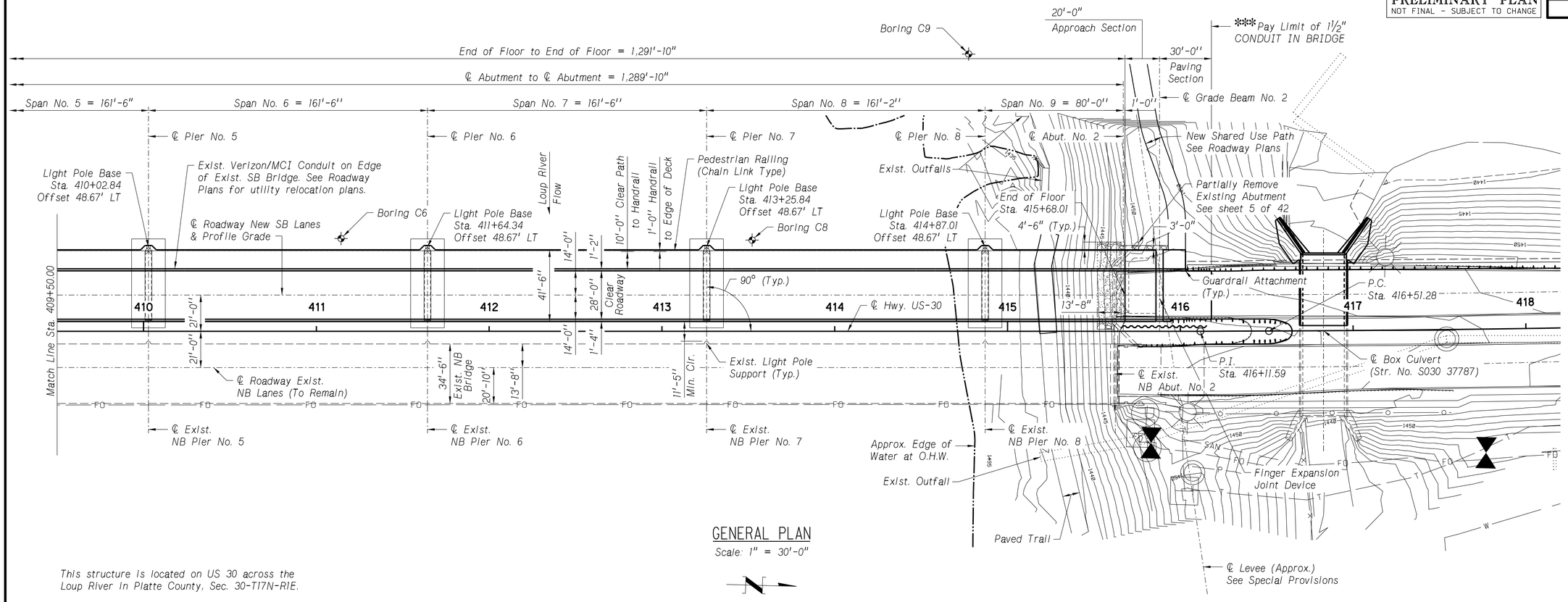

GENERAL PLAN
Scale: 1" = 30'-0"

This structure is located on US 30 across the Loup River in Platte County, Sec. 30-T17N-R1E.

Grade Elevations shown are at the Profile Grade Line. All Grade Elevations shall be to top of concrete.

See Roadway plans for trail connections to shared use path.

**4'-0" Rail Post with Junction Box. See Sheet 34 of 42.

***1½" Φ Lighting Conduit shall extend to End of Paving Section at a depth of 2'-6" below top of Paving Section. End of conduit shall be capped. See sheets 34 and 39 of 42.

*Station of End of Paving Section at ℄ Roadway New SB Lanes. Alignment deflects at P.I. Sta. 416+11.59.

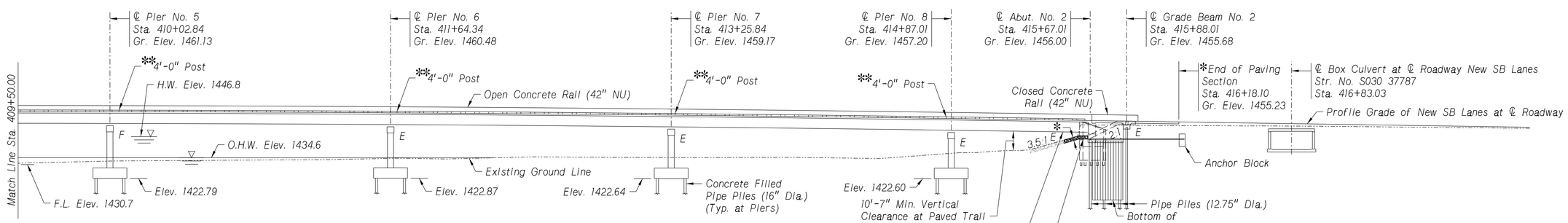

GENERAL ELEVATION
Scale: 1" = 30'-0"

*Broken Concrete Riprap, 2'-0" thick. Place filter fabric under riprap. Proposed riprap to be recessed into existing riprap slope (3.5:1), as shown.

BURNS McDONNELL

1,289'-10" 9-SPAN
WELDED PLATE GIRDER BRIDGE
GENERAL PLAN & ELEVATION 2

COUNTY PLATTE
HWY. NO. US 30
REF. POST. 377.73L
STA. 409+22.09
LOCATION COLUMBUS SOUTH
SKEW 0°
ROADWAY 28'-0"
DESIGN LIVE LOAD HL-93
DATE JUL 2023
DESIGNED BY ASF
DETAILED BY TWM
CHECKED BY SDH

NEBRASKA DEPARTMENT OF TRANSPORTATION - BRIDGE DIVISION

NEBRASKA
Good Life. Great Journey.
DEPARTMENT OF TRANSPORTATION

SPECIAL PLAN NO. 2

BRIDGE DIVISION.
Computer: B713227
User: asferdon
Date: 10-JUL-2023 21:52
File: S030_37773L_CPG

PRELIMINARY PLAN
NOT FINAL - SUBJECT TO CHANGE

PROJECT NUMBER	SHEET NO.
NH-30-5(131)	S46

C.N. 31983

STRUCTURE NUMBER
S030 37773L

BRIDGE ENGINEER

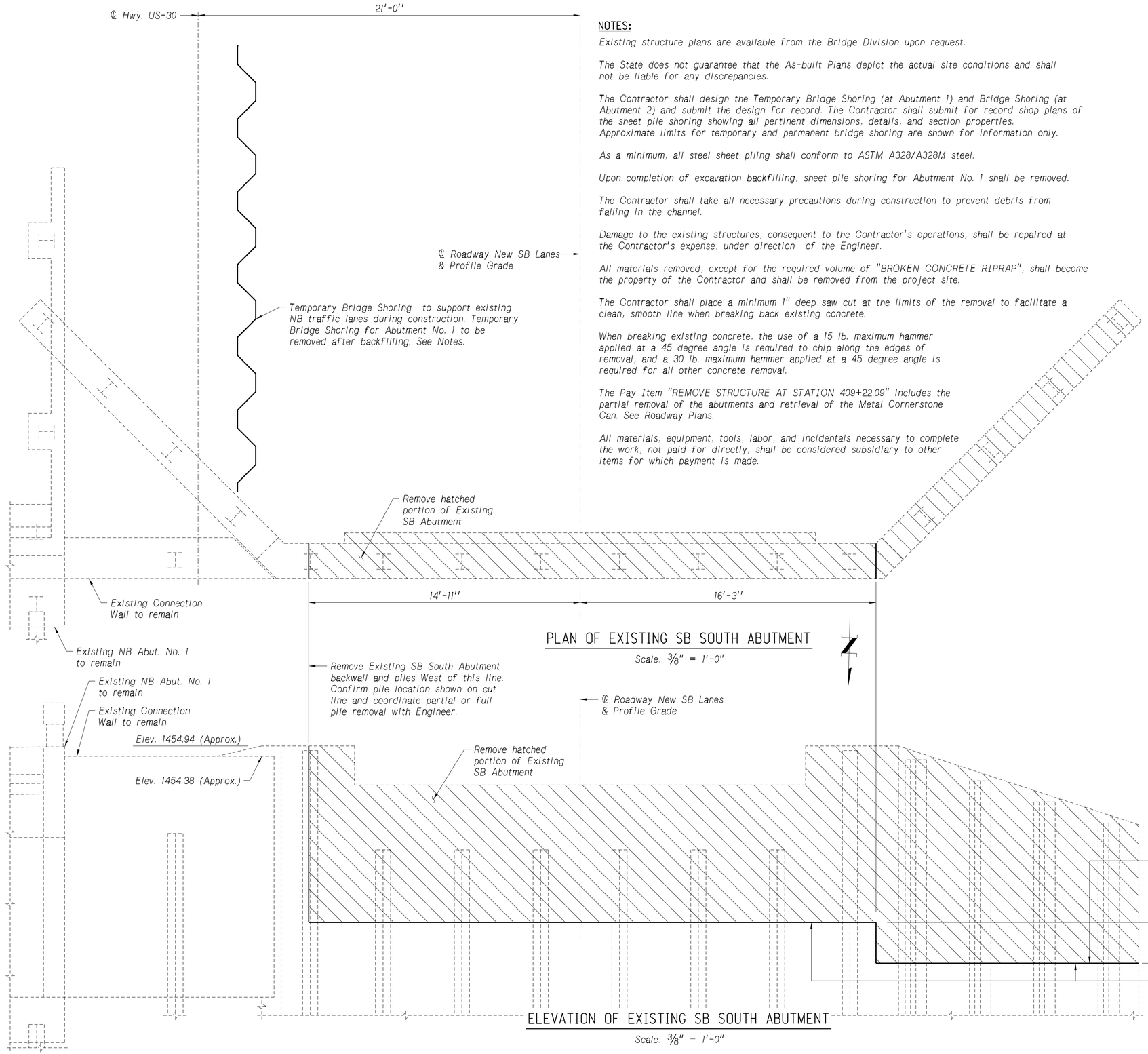

PLAN OF EXISTING SB SOUTH ABUTMENT

Scale: 3/8" = 1'-0"

ELEVATION OF EXISTING SB SOUTH ABUTMENT

Scale: 3/8" = 1'-0"

NOTES:

Existing structure plans are available from the Bridge Division upon request.

The State does not guarantee that the As-built Plans depict the actual site conditions and shall not be liable for any discrepancies.

The Contractor shall design the Temporary Bridge Shoring (at Abutment 1) and Bridge Shoring (at Abutment 2) and submit the design for record. The Contractor shall submit for record shop plans of the sheet pile shoring showing all pertinent dimensions, details, and section properties. Approximate limits for temporary and permanent bridge shoring are shown for information only.

As a minimum, all steel sheet piling shall conform to ASTM A328/A328M steel.

Upon completion of excavation backfilling, sheet pile shoring for Abutment No. 1 shall be removed.

The Contractor shall take all necessary precautions during construction to prevent debris from falling in the channel.

Damage to the existing structures, consequent to the Contractor's operations, shall be repaired at the Contractor's expense, under direction of the Engineer.

All materials removed, except for the required volume of "BROKEN CONCRETE RIPRAP", shall become the property of the Contractor and shall be removed from the project site.

The Contractor shall place a minimum 1" deep saw cut at the limits of the removal to facilitate a clean, smooth line when breaking back existing concrete.

When breaking existing concrete, the use of a 15 lb. maximum hammer applied at a 45 degree angle is required to chip along the edges of removal, and a 30 lb. maximum hammer applied at a 45 degree angle is required for all other concrete removal.

The Pay Item "REMOVE STRUCTURE AT STATION 409+22.09" includes the partial removal of the abutments and retrieval of the Metal Cornerstone Can. See Roadway Plans.

All materials, equipment, tools, labor, and incidentals necessary to complete the work, not paid for directly, shall be considered subsidiary to other items for which payment is made.

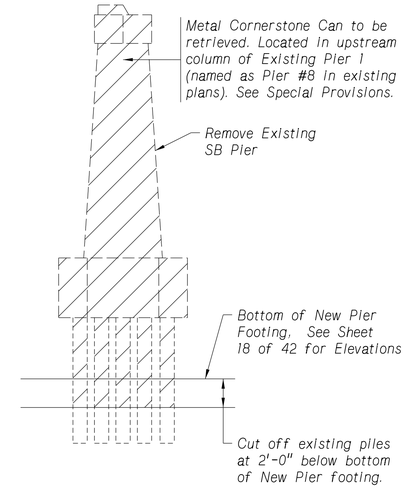

TYPICAL PIER REMOVAL DETAIL

Scale: 1" = 5'-0"

1,289'-10" 9-SPAN
WELDED PLATE GIRDER BRIDGE
REMOVALS AND SHORING 1

COUNTY PLATTE
HWY. NO. US 30
REF. POST. 377.73L
STA. 409+22.09

LOCATION COLUMBUS SOUTH
SKEW 0°
ROADWAY 28'-0"
DESIGN LIVE LOAD HL-93

DESIGNED BY ASF
DETAILED BY TWM
CHECKED BY SDH
DATE JUL 2023

NEBRASKA DEPARTMENT OF TRANSPORTATION - BRIDGE DIVISION

NEBRASKA
Good Life. Great Journey.
DEPARTMENT OF TRANSPORTATION

BURNS McDONNELL

SPECIAL PLAN NO.	4 / 42
2	

BRIDGE DIVISION.
Computer: B720560
User: nmfischer
Date: 07-JUL-2023 13:05
File: S030_37773L_CPG

BRIDGE DIVISION.
Computer: B720560
User: nmfischer
Date: 07-JUL-2023 13:05
File: S030_37773L_CPG

PRELIMINARY PLAN
NOT FINAL - SUBJECT TO CHANGE

PROJECT NUMBER	SHEET NO.
NH-30-5(131)	S47

C.N. 31983
STRUCTURE NUMBER
S030 37773L

BRIDGE ENGINEER

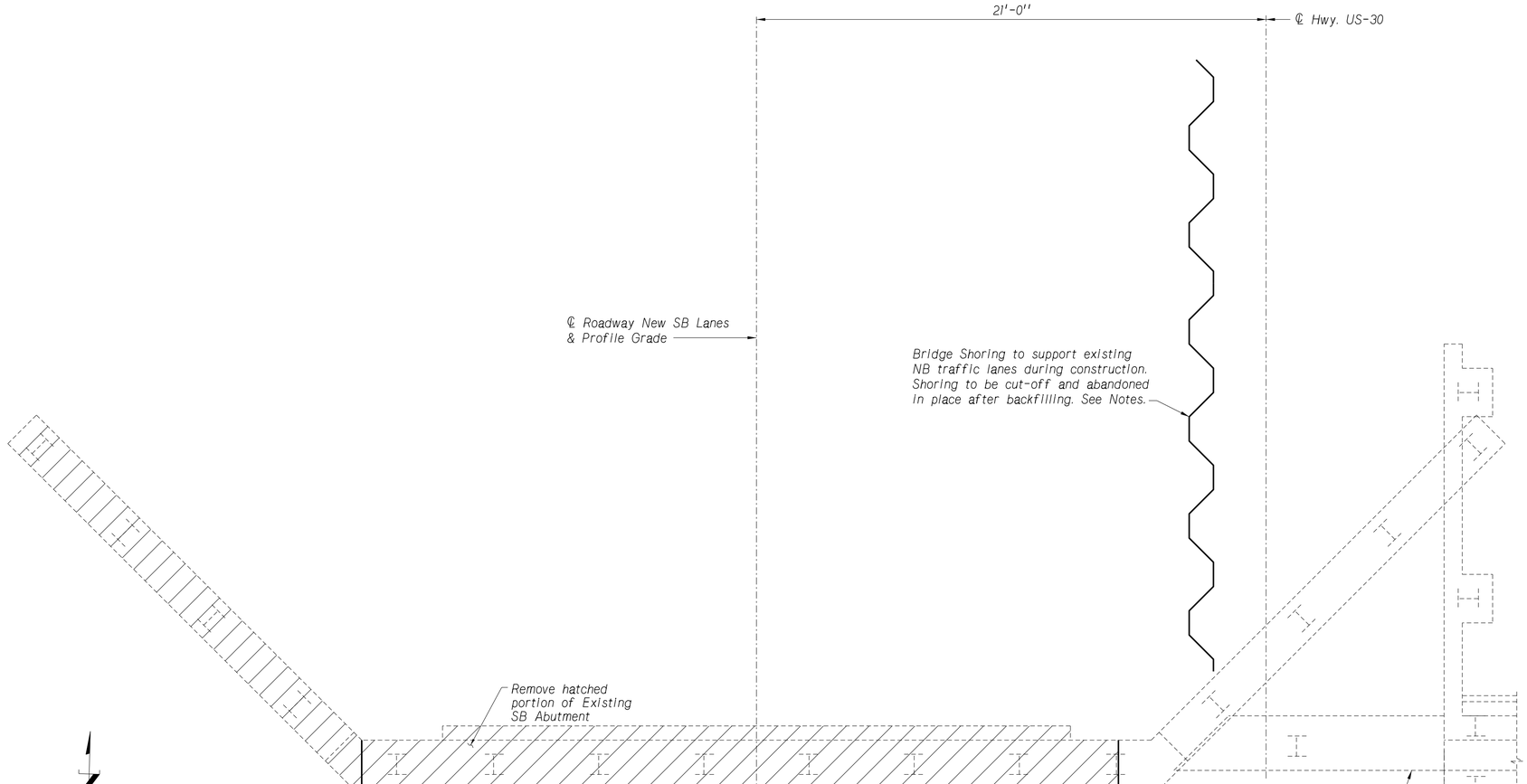

PLAN OF EXISTING SB NORTH ABUTMENT

Scale: 3/8" = 1'-0"

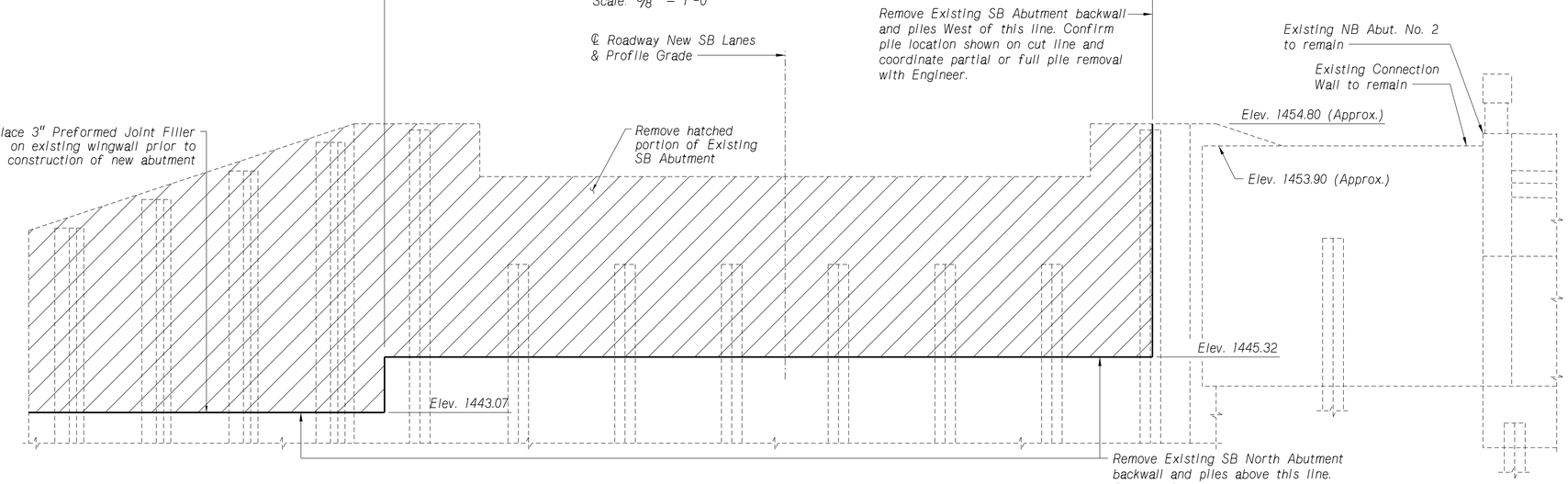

ELEVATION OF EXISTING SB NORTH ABUTMENT

Scale: 3/8" = 1'-0"

NOTES:

See "Removals and Shoring 1", sheet 4 of 42 for additional notes.

Upon completion of excavation backfilling, sheet pile shoring for Abutment No. 2 (the North Abutment) shall be cut off at 3'-0" below finished ground surface. Sheet pile below this elevation shall be abandoned in place.

BURNS McDONNELL

1,289'-10" 9-SPAN
WELDED PLATE GIRDER BRIDGE
REMOVALS AND SHORING 2

COUNTY PLATTE
HWY. NO. US 30
REF. POST. 377.73L
STA. 409+22.09

LOCATION COLUMBUS SOUTH
SKEW 0°
ROADWAY 28'-0"
DESIGN LIVE LOAD HL-93

DESIGNED BY ASF
DETAILED BY TWM
CHECKED BY SDH
DATE JUL 2023

NEBRASKA DEPARTMENT OF TRANSPORTATION - BRIDGE DIVISION

NEBRASKA
Good Life. Great Journey.
DEPARTMENT OF TRANSPORTATION

SPECIAL PLAN NO. 2

PRELIMINARY PLAN
NOT FINAL - SUBJECT TO CHANGE

PROJECT NUMBER	SHEET NO.
NH-30-5(131)	S48

C.N. 31983
STRUCTURE NUMBER S030 37773L

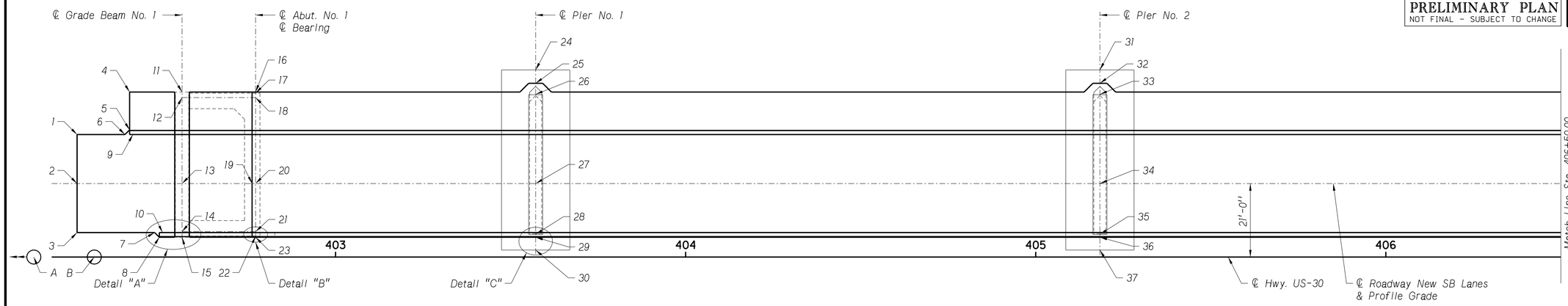

COORDINATE LAYOUT - SPANS 1-3

Scale: 1" = 15'-0"

COORDINATES, STATIONING & OFFSETS					
POINT	STATION	OFFSET TO STA. (FT.)	LT/RT	X COORDINATE	Y COORDINATE
1	402+26.17	35.00	LT	2,362,911.635	587,217.269
2	402+26.17	21.00	LT	2,362,925.629	587,217.666
3	402+26.17	7.00	LT	2,362,939.624	587,218.063
4	402+41.17	47.17	LT	2,362,899.048	587,231.917
5	402+41.17	36.33	LT	2,362,909.877	587,232.225
6	402+39.84	35.00	LT	2,362,911.247	587,230.930
7	402+48.34	7.00	LT	2,362,938.995	587,240.221
8	402+49.67	5.67	LT	2,362,940.290	587,241.592
9	402+42.92	35.00	LT	2,362,911.160	587,234.012
10	402+51.42	7.00	LT	2,362,938.907	587,243.303
11	402+56.17	47.17	LT	2,362,898.622	587,246.911
12	402+56.17	45.58	LT	2,362,900.205	587,246.956
13	402+56.17	21.00	LT	2,362,924.778	587,247.654
14	402+56.17	7.25	LT	2,362,938.523	587,248.044
15	402+56.17	5.67	LT	2,362,940.105	587,248.089
16	402+77.17	47.17	LT	2,362,898.026	587,267.903
17	402+77.17	46.83	LT	2,362,898.360	587,267.912
18	402+77.17	45.58	LT	2,362,899.609	587,267.948
19	402+76.17	21.00	LT	2,362,924.211	587,267.646
20	402+77.17	21.00	LT	2,362,924.182	587,268.646
21	402+77.17	7.25	LT	2,362,937.927	587,269.036
22	402+77.17	6.00	LT	2,362,939.176	587,269.071
23	402+77.17	5.67	LT	2,362,939.509	587,269.081
24	403+57.17	53.50	LT	2,362,889.425	587,347.691
25	403+57.17	49.67	LT	2,362,893.257	587,347.800
26	403+57.17	46.42	LT	2,362,896.506	587,347.892
27	403+57.17	21.00	LT	2,362,921.912	587,348.613
28	403+57.17	6.42	LT	2,362,936.490	587,349.027
29	403+57.17	5.67	LT	2,362,937.239	587,349.048
30	403+57.17	2.00	LT	2,362,940.905	587,349.152
31	405+18.34	53.50	LT	2,362,884.852	587,508.796
32	405+18.34	49.67	LT	2,362,888.684	587,508.905
33	405+18.34	46.42	LT	2,362,891.932	587,508.997
34	405+18.34	21.00	LT	2,362,917.339	587,509.718
35	405+18.34	6.42	LT	2,362,931.916	587,510.132
36	405+18.34	5.67	LT	2,362,932.666	587,510.153
37	405+18.34	2.00	LT	2,362,936.331	587,510.258
38	406+79.84	53.50	LT	2,362,880.269	587,670.231
39	406+79.84	49.67	LT	2,362,884.101	587,670.340
40	406+79.84	46.42	LT	2,362,887.349	587,670.432
41	406+79.84	21.00	LT	2,362,912.756	587,671.153
42	406+79.84	6.42	LT	2,362,927.333	587,671.567
43	406+79.84	5.67	LT	2,362,928.083	587,671.588
44	406+79.84	2.00	LT	2,362,931.748	587,671.693
45	408+41.34	53.50	LT	2,362,875.686	587,831.666
46	408+41.34	49.67	LT	2,362,879.518	587,831.775
47	408+41.34	46.42	LT	2,362,882.767	587,831.867
48	408+41.34	21.00	LT	2,362,908.173	587,832.588
49	408+41.34	6.42	LT	2,362,922.750	587,833.002
50	408+41.34	5.67	LT	2,362,923.500	587,833.023
51	408+41.34	2.00	LT	2,362,927.165	587,833.127
52	409+22.09	21.00	LT	2,362,905.882	587,913.306

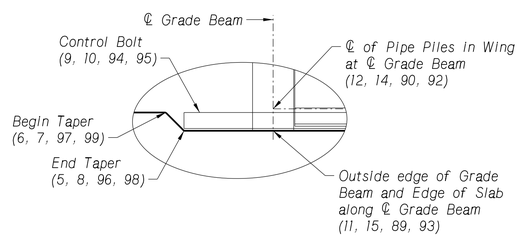

DETAIL "A"

East side at Grade Beam No. 1 is shown.
Other locations similar.
Not to Scale.

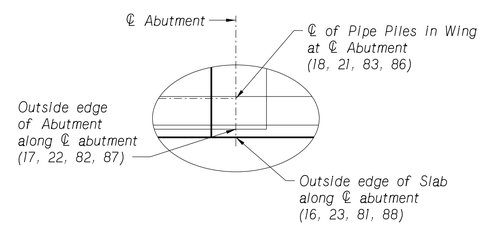

DETAIL "B"

East side at Abut. No. 1 is shown.
Other locations similar.
Not to Scale.

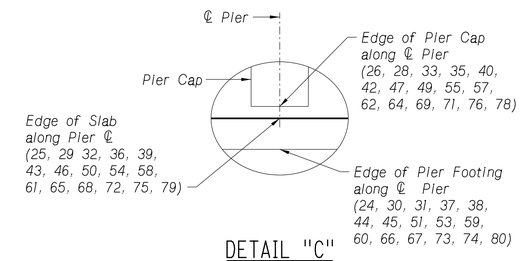

DETAIL "C"

East side at Pier No. 1 is shown.
Other locations similar.
Not to Scale.

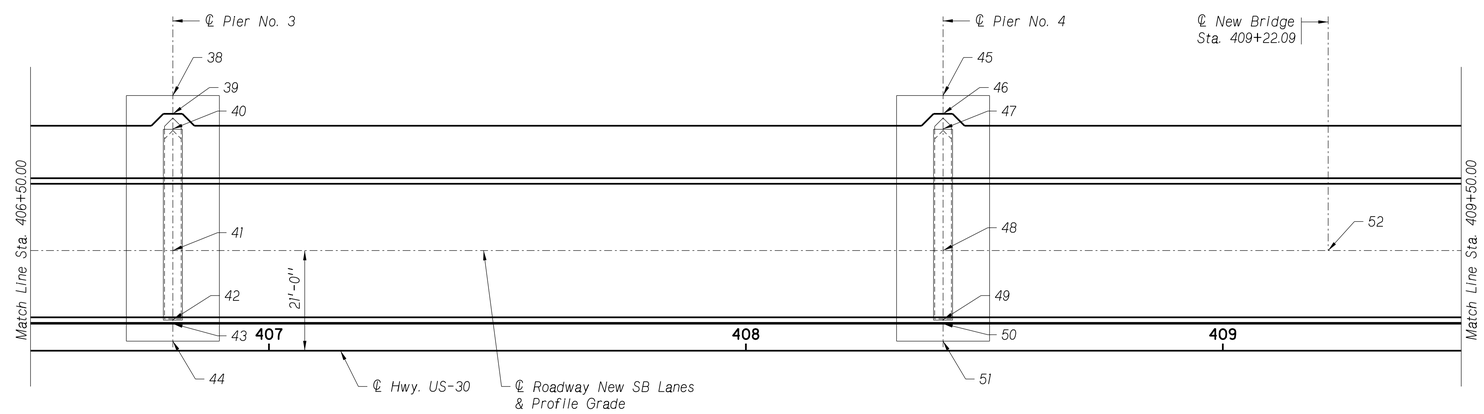

COORDINATE LAYOUT - SPANS 4-5

Scale: 1" = 15'-0"

ALIGNMENT CONTROL POINTS			
POINT NO.	STATION (NO OFFSET)	X COORDINATE	Y COORDINATE
A	391+24.00	2,362,977.668	586,116.529
B	402+31.05	2,362,946.483	587,223.141
C	416+11.59	2,362,907.307	588,603.128
D	416+51.28	2,362,906.019	588,642.793

DATUM INFORMATION	
HORIZONTAL	VERTICAL
NAD 83 (1995)	NAVD 88
D.A.F. = 1.0004057	

BURNS McDONNELL

BRIDGE ENGINEER

1,289'-10" 9-SPAN
WELDED PLATE GIRDER BRIDGE
COORDINATE LAYOUT & DATA 1

LOCATION COLUMBUS SOUTH
SKEW 0°
ROADWAY 28'-0"
DESIGN LIVE LOAD HL-93

COUNTY PLATTE
HWY. NO. US 30
REF. POST. 377.73L
STA. 409+22.09

DATE JUL 2023
CHECKED BY SDH
DETAILED BY TWM
DESIGNED BY ASF

NEBRASKA DEPARTMENT OF TRANSPORTATION - BRIDGE DIVISION

NEBRASKA
Good Life. Great Journey.
DEPARTMENT OF TRANSPORTATION

SPECIAL PLAN NO. 2

BRIDGE DIVISION.
Computer: B720560
User: nmfischer
Date: 07-JUL-2023 13:05
File: S030_37773L_CPG

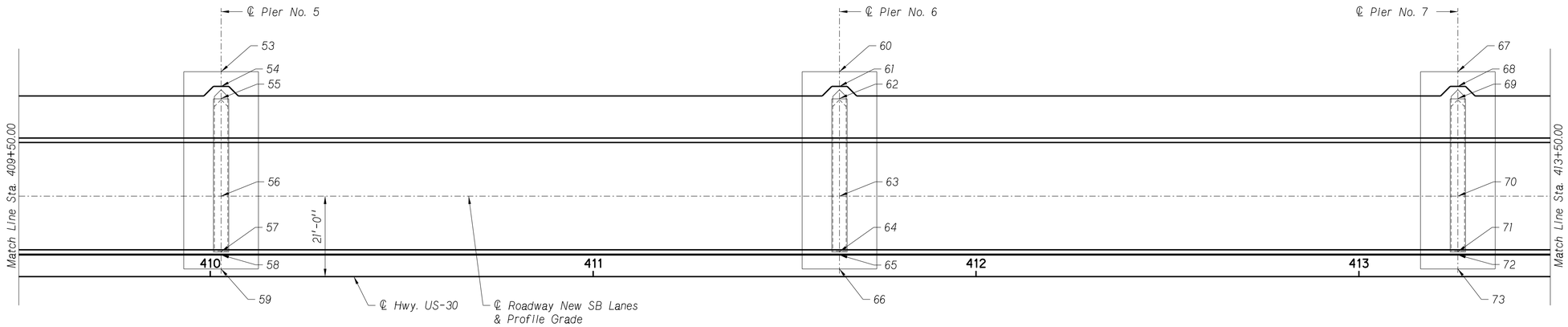

COORDINATE LAYOUT - SPANS 6-7

Scale: 1" = 15'-0"

COORDINATES, STATIONING & OFFSETS					
POINT	STATION	OFFSET TO STA. (FT.)	LT/RT	X COORDINATE	Y COORDINATE
53	410+2.84	53.50	LT	2,362,871.103	587,993.101
54	410+2.84	49.67	LT	2,362,874.935	587,993.210
55	410+2.84	46.42	LT	2,362,878.184	587,993.302
56	410+2.84	21.00	LT	2,362,903.590	587,994.023
57	410+2.84	6.42	LT	2,362,918.168	587,994.437
58	410+2.84	5.67	LT	2,362,918.917	587,994.458
59	410+2.84	2.00	LT	2,362,922.582	587,994.563
60	411+64.34	53.50	LT	2,362,866.520	588,154.536
61	411+64.34	49.67	LT	2,362,870.352	588,154.645
62	411+64.34	46.42	LT	2,362,873.601	588,154.737
63	411+64.34	21.00	LT	2,362,899.007	588,155.458
64	411+64.34	6.42	LT	2,362,913.585	588,155.872
65	411+64.34	5.67	LT	2,362,914.334	588,155.893
66	411+64.34	2.00	LT	2,362,918.000	588,155.997
67	413+25.84	53.50	LT	2,362,861.938	588,315.971
68	413+25.84	49.67	LT	2,362,865.769	588,316.080
69	413+25.84	46.42	LT	2,362,869.018	588,316.172
70	413+25.84	21.00	LT	2,362,894.424	588,316.893
71	413+25.84	6.42	LT	2,362,909.002	588,317.307
72	413+25.84	5.67	LT	2,362,909.751	588,317.328
73	413+25.84	2.00	LT	2,362,913.417	588,317.432
74	414+87.01	53.50	LT	2,362,857.364	588,477.076
75	414+87.01	49.67	LT	2,362,861.196	588,477.185
76	414+87.01	46.42	LT	2,362,864.444	588,477.277
77	414+87.01	21.00	LT	2,362,889.851	588,477.998
78	414+87.01	6.42	LT	2,362,904.428	588,478.412
79	414+87.01	5.67	LT	2,362,905.178	588,478.433
80	414+87.01	2.00	LT	2,362,908.843	588,478.537
81	415+67.01	47.17	LT	2,362,861.425	588,557.224
82	415+67.01	46.83	LT	2,362,861.758	588,557.233
83	415+67.01	45.58	LT	2,362,863.007	588,557.268
84	415+67.01	21.00	LT	2,362,887.581	588,557.966
85	415+68.01	21.00	LT	2,362,887.552	588,558.966
86	415+67.01	7.25	LT	2,362,901.325	588,558.356
87	415+67.01	6.00	LT	2,362,902.575	588,558.392
88	415+67.01	5.67	LT	2,362,902.908	588,558.401
89	415+88.01	47.17	LT	2,362,860.829	588,578.215
90	415+88.01	45.58	LT	2,362,862.411	588,578.260
91	415+88.01	21.00	LT	2,362,886.985	588,578.958
92	415+88.01	7.25	LT	2,362,900.729	588,579.348
93	415+88.01	5.67	LT	2,362,902.312	588,579.393
94	416+1.26	35.00	LT	2,362,872.614	588,591.805
95	415+92.76	7.00	LT	2,362,900.844	588,584.103
96	416+3.01	36.33	LT	2,362,871.232	588,593.516
97	416+4.34	35.00	LT	2,362,872.527	588,594.887
98	415+94.51	5.67	LT	2,362,902.127	588,585.890
99	415+95.84	7.00	LT	2,362,900.757	588,587.185
100	416+18.15	34.97	LT	2,362,872.139	588,608.548
101	416+18.10	21.00	LT	2,362,886.107	588,608.945
102	416+18.04	6.97	LT	2,362,900.128	588,609.343

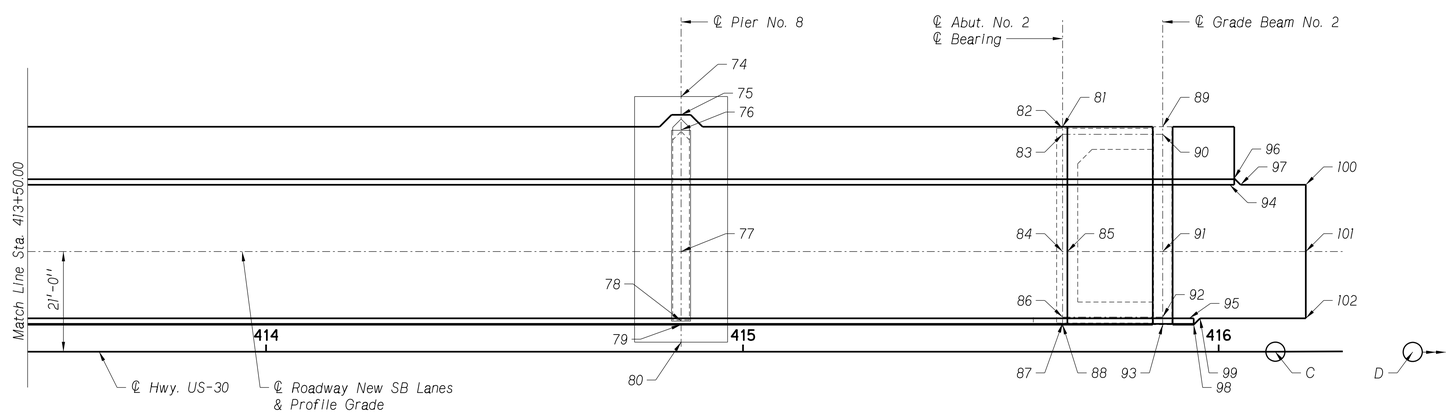

COORDINATE LAYOUT - SPANS 8-9

Scale: 1" = 15'-0"

PRELIMINARY PLAN
NOT FINAL - SUBJECT TO CHANGE

BURNS McDONNELL

PROJECT NUMBER	SHEET NO.
NH-30-5(131)	S49

C.N. 31983

STRUCTURE NUMBER S030 37773L

BRIDGE ENGINEER

1,289'-10" 9-SPAN
WELDED PLATE GIRDER BRIDGE
COORDINATE LAYOUT & DATA 2

LOCATION COLUMBUS SOUTH
SKEW 0°
ROADWAY 28'-0"
DESIGN LIVE LOAD HL-93

COUNTY PLATTE
HWY. NO. US 30
REF. POST. 377.73L
STA. 409+22.09

DATE JUL 2023
DETAILED BY TWM
CHECKED BY SDH
DESIGNED BY ASF

NEBRASKA DEPARTMENT OF TRANSPORTATION - BRIDGE DIVISION

NEBRASKA
Good Life. Great Journey.
DEPARTMENT OF TRANSPORTATION

SPECIAL PLAN NO. 2

7 / 42

BRIDGE DIVISION.

Computer: B720560

User: nmfischer

Date: 07-JUL-2023 13:06

File: S030_37773L_CPG

PRELIMINARY PLAN
NOT FINAL - SUBJECT TO CHANGE

PROJECT NUMBER	SHEET NO.
NH-30-5(131)	S50

C.N. 31983
STRUCTURE NUMBER S030 37773L

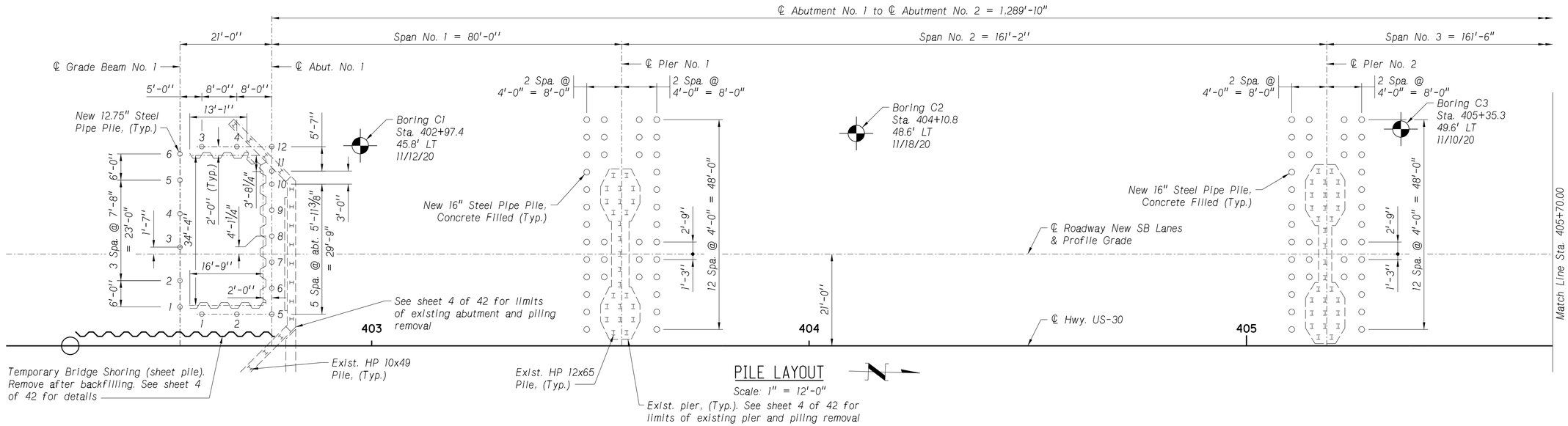

PILE LAYOUT

Scale: 1" = 12'-0"

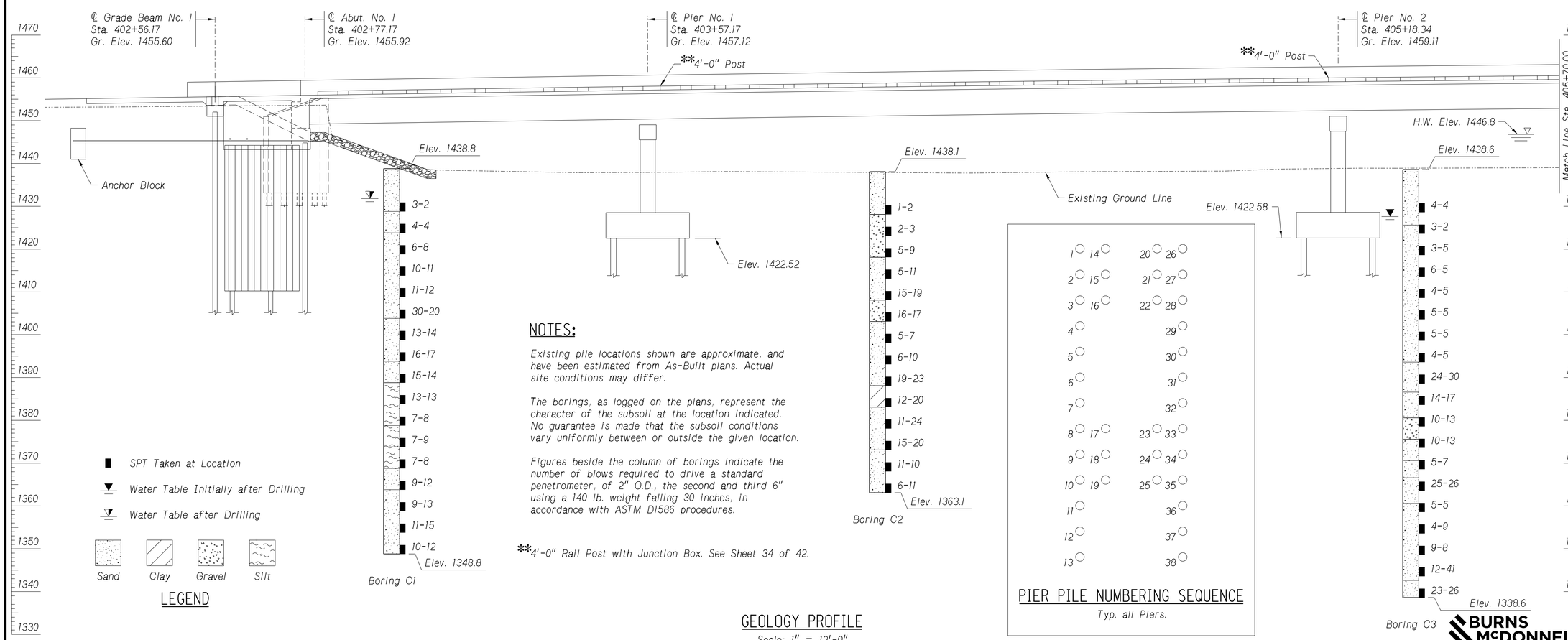

NOTES:

Existing pile locations shown are approximate, and have been estimated from As-Built plans. Actual site conditions may differ.

The borings, as logged on the plans, represent the character of the subsoil at the location indicated. No guarantee is made that the subsoil conditions vary uniformly between or outside the given location.

Figures beside the column of borings indicate the number of blows required to drive a standard penetrometer, of 2" O.D., the second and third 6" using a 140 lb. weight falling 30 inches, in accordance with ASTM D1586 procedures.

**4'-0" Rail Post with Junction Box. See Sheet 34 of 42.

LEGEND

- SPT Taken at Location
- Water Table Initially after Drilling
- Water Table after Drilling

Sand, Clay, Gravel, Silt

PIER PILE NUMBERING SEQUENCE

Typ. all Piers.

GEOLOGY PROFILE

Scale: 1" = 12'-0"

BRIDGE ENGINEER

1,289'-10" 9-SPAN
WELDED PLATE GIRDER BRIDGE
GEOLOGICAL PROFILE & PILE LAYOUT 1

DATE JUL 2023
DESIGNED BY ASF
DETAILED BY TWM
CHECKED BY SDH

LOCATION COLUMBUS SOUTH
SKEW 0°
ROADWAY 28'-0"
DESIGN LIVE LOAD HL-93

COUNTY PLATTE
HWY. NO. US 30
REF. POST. 377.73L
STA. 409+22.09

NEBRASKA DEPARTMENT OF TRANSPORTATION - BRIDGE DIVISION

NEBRASKA
Good Life. Great Journey.
DEPARTMENT OF TRANSPORTATION

BURNS McDONNELL

SPECIAL PLAN NO. 2

BRIDGE DIVISION.
Computer: B720560
User: nmfischer
Date: 07-JUL-2023 16:47
File: S030_37773L_CPG

PRELIMINARY PLAN
NOT FINAL - SUBJECT TO CHANGE

PROJECT NUMBER	SHEET NO.
NH-30-5(131)	S51

C.N. 31983

STRUCTURE NUMBER
S030 37773L

BRIDGE ENGINEER

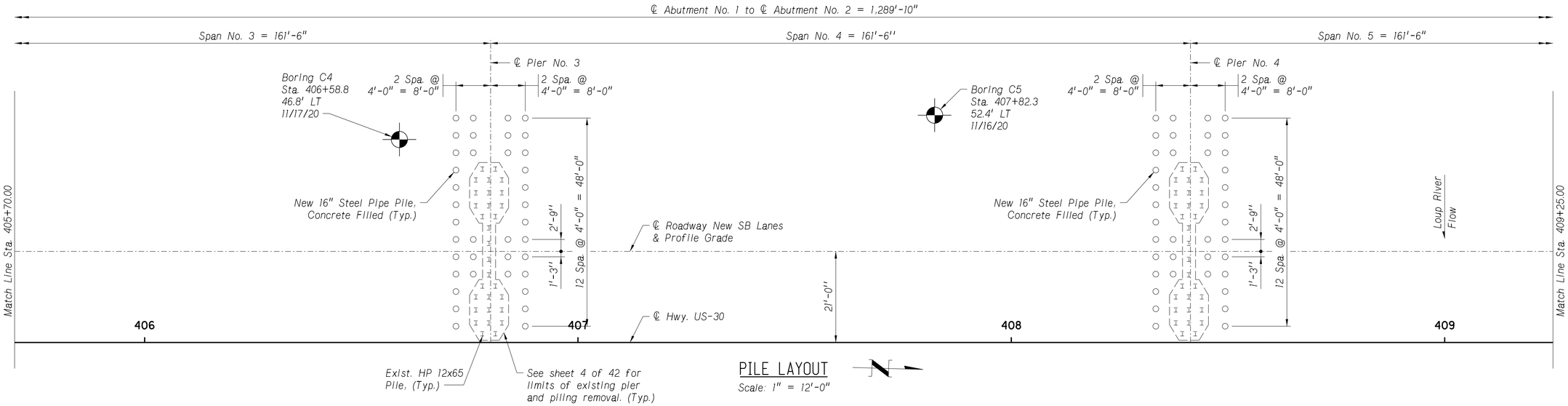

PILE LAYOUT
Scale: 1" = 12'-0"

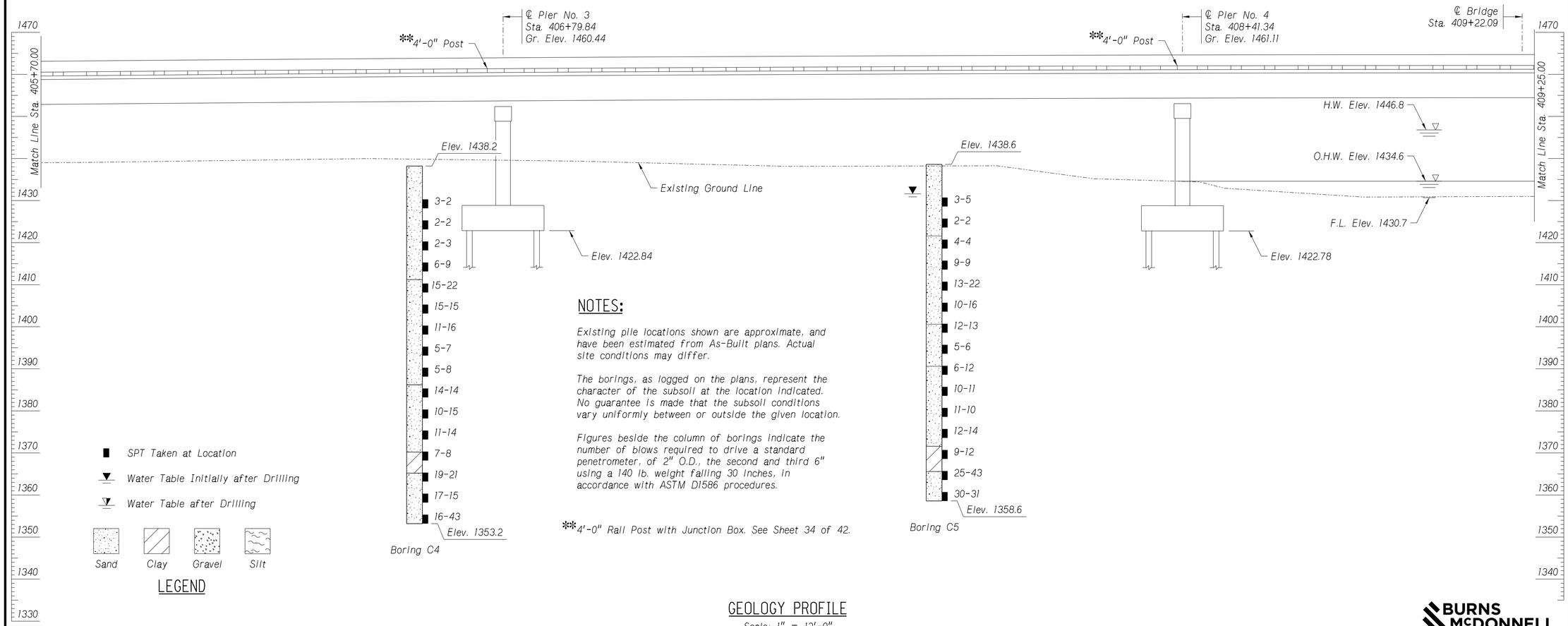

LEGEND

NOTES:

Existing pile locations shown are approximate, and have been estimated from As-Built plans. Actual site conditions may differ.

The borings, as logged on the plans, represent the character of the subsoil at the location indicated. No guarantee is made that the subsoil conditions vary uniformly between or outside the given location.

Figures beside the column of borings indicate the number of blows required to drive a standard penetrometer, of 2" O.D., the second and third 6" using a 140 lb. weight falling 30 inches, in accordance with ASTM D1586 procedures.

**4'-0" Rail Post with Junction Box. See Sheet 34 of 42.

GEOLOGY PROFILE
Scale: 1" = 12'-0"

1,289'-10" 9-SPAN
WELDED PLATE GIRDER BRIDGE
GEOLOGICAL PROFILE & PILE LAYOUT 2

LOCATION COLUMBUS SOUTH
SKEW 0°
ROADWAY 28'-0"
DESIGN LIVE LOAD HL-93

COUNTY PLATTE
HWY. NO. US 30
REF. POST. 377.73L
STA. 409+22.09

DESIGNED BY ASF
DETAILED BY TWM
CHECKED BY SDH
DATE JUL 2023

NEBRASKA DEPARTMENT OF TRANSPORTATION - BRIDGE DIVISION

NEBRASKA
Good Life. Great Journey.
DEPARTMENT OF TRANSPORTATION

BURNS McDONNELL

SPECIAL PLAN NO.	
2	9 / 42

BRIDGE DIVISION.
Computer: B720560
User: nmfischer
Date: 07-JUL-2023 13:07
File: S030_37773L_CPG

PRELIMINARY PLAN
NOT FINAL - SUBJECT TO CHANGE

PROJECT NUMBER	SHEET NO.
NH-30-5(131)	S52

C.N. 31983
STRUCTURE NUMBER S030 37773L

BRIDGE ENGINEER

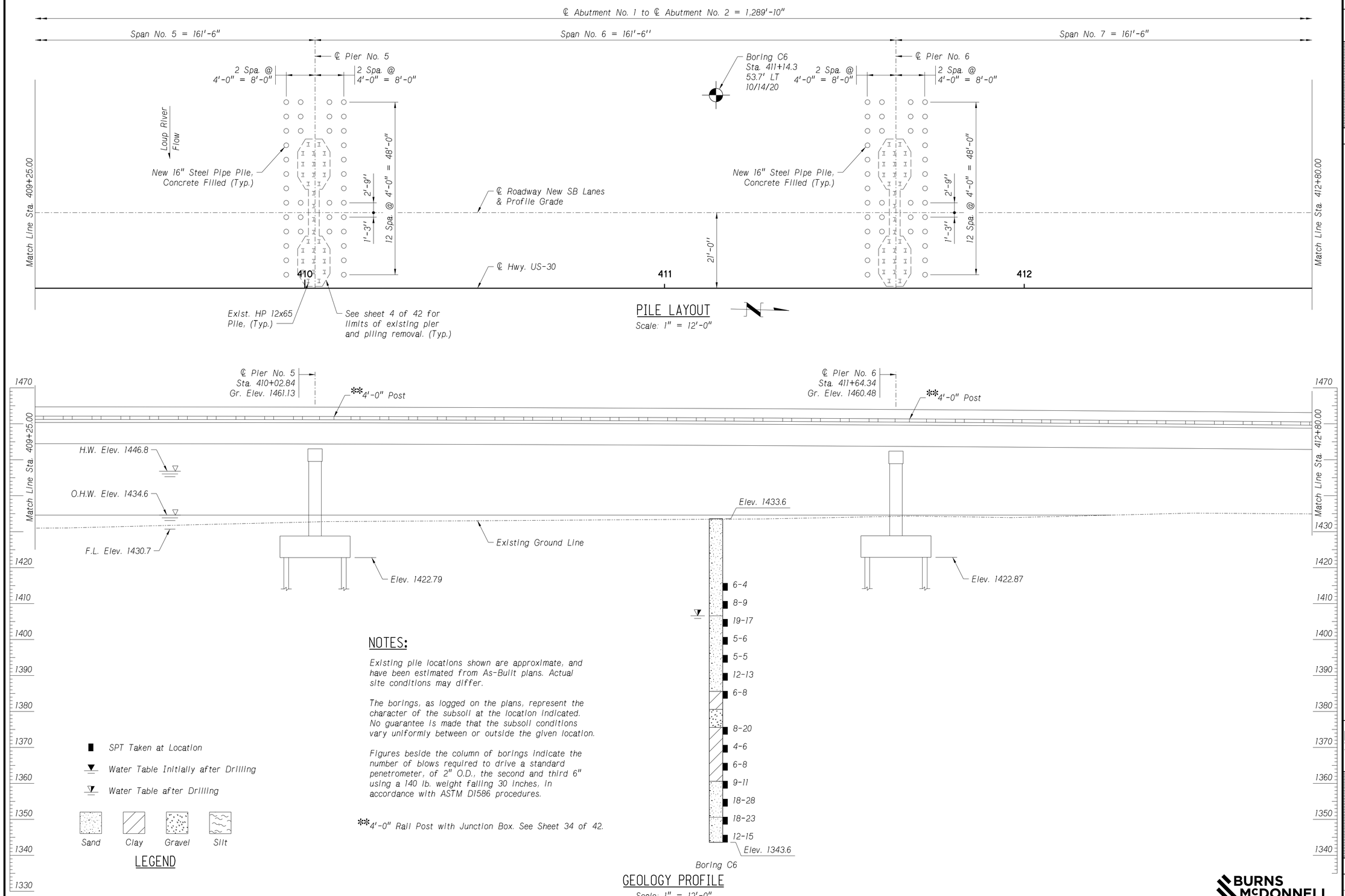

NOTES:

Existing pile locations shown are approximate, and have been estimated from As-Built plans. Actual site conditions may differ.

The borings, as logged on the plans, represent the character of the subsoil at the location indicated. No guarantee is made that the subsoil conditions vary uniformly between or outside the given location.

Figures beside the column of borings indicate the number of blows required to drive a standard penetrometer, of 2" O.D., the second and third 6" using a 140 lb. weight falling 30 inches, in accordance with ASTM D1586 procedures.

**4'-0" Rail Post with Junction Box. See Sheet 34 of 42.

1,289'-10" 9-SPAN
WELDED PLATE GIRDER BRIDGE
GEOLOGICAL PROFILE & PILE LAYOUT 3

LOCATION COLUMBUS SOUTH
SKEW 0°
ROADWAY 28'-0"
DESIGN LIVE LOAD HL-93

COUNTY PLATTE
HWY. NO. US 30
REF. POST. 377.73L
STA. 409+22.09

DESIGNED BY ASF
DETAILED BY TWM
CHECKED BY SDH
DATE JUL 2023

NEBRASKA DEPARTMENT OF TRANSPORTATION - BRIDGE DIVISION

NEBRASKA
Good Life. Great Journey.
DEPARTMENT OF TRANSPORTATION

BURNS McDONNELL

SPECIAL PLAN NO. 2

BRIDGE DIVISION.
Computer: B720560
User: nmfischer
Date: 07-JUL-2023 13:07
File: S030_37773L_CPG

PRELIMINARY PLAN
NOT FINAL - SUBJECT TO CHANGE

PROJECT NUMBER	SHEET NO.
NH-30-5(131)	S53

C.N. 31983
STRUCTURE NUMBER S030 37773L

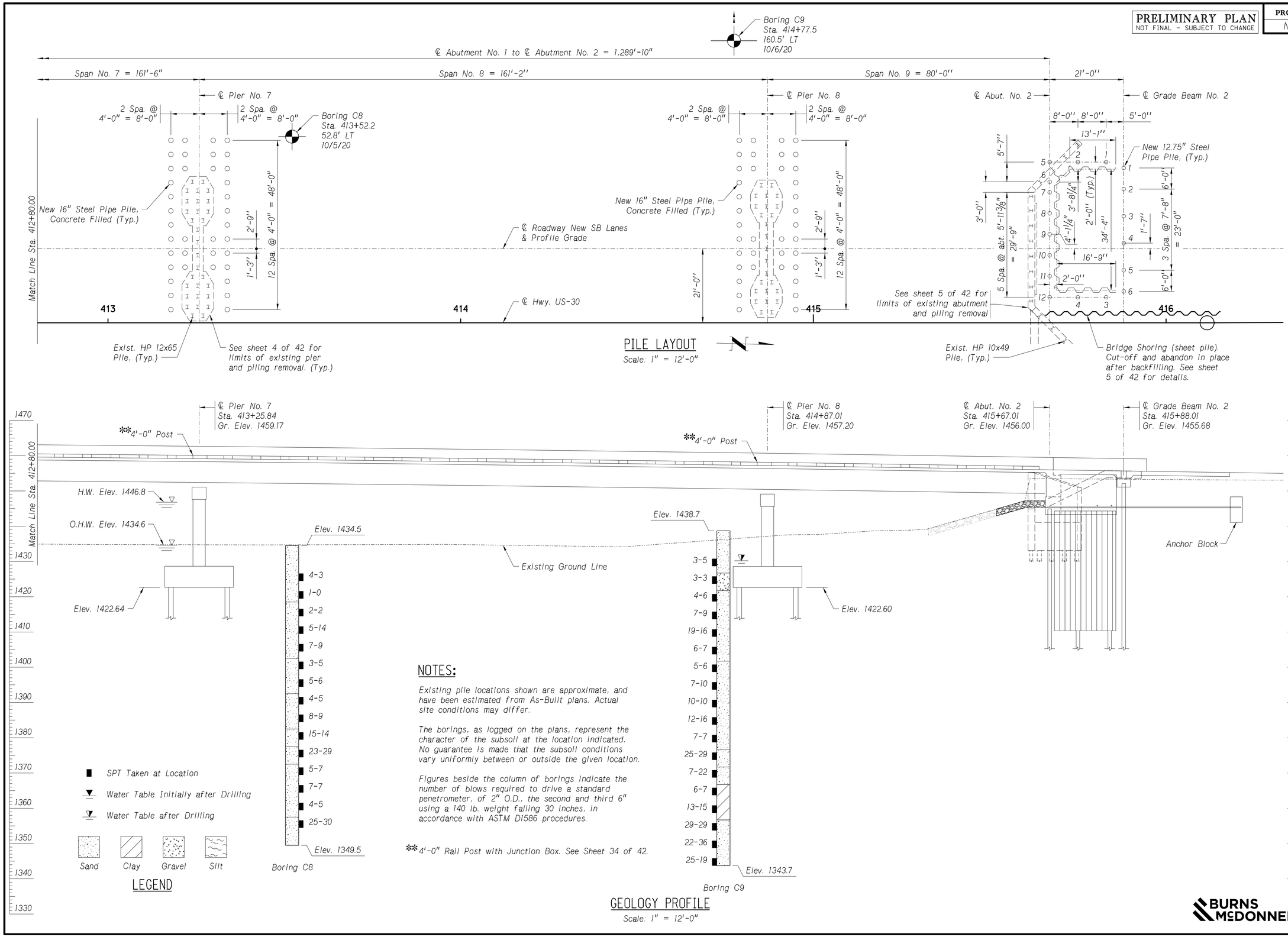

BRIDGE ENGINEER

1,289'-10" 9-SPAN
WELDED PLATE GIRDER BRIDGE
GEOLOGICAL PROFILE & PILE LAYOUT 4

DATE JUL 2023
DESIGNED BY ASF
DETAILED BY TWM
CHECKED BY SDH

LOCATION COUNTY PLATTE
SKEW 0°
HWY. NO. US 30
ROADWAY 28'-0"
REF. POST. 377.73L
DESIGN LIVE LOAD HL-93
STA. 409+22.09

NEBRASKA DEPARTMENT OF TRANSPORTATION - BRIDGE DIVISION

NEBRASKA
Good Life. Great Journey.
DEPARTMENT OF TRANSPORTATION

BURNS McDONNELL

SPECIAL PLAN NO. 2

BRIDGE DIVISION.
Computer: B720560
User: nmfischer
Date: 07-JUL-2023 13:07
File: S030_37773L_CPG

PILE DATA

LOCATION	PILE NUMBER	CUT-OFF ELEVATION	MINIMUM PENETRATION BELOW CUT-OFF (feet)	TENTATIVE PILE ORDER LENGTH (feet)	PILE ORDER LENGTH (feet)	DESIGN PILE BEARING (kips/pile)	PILE TYPE
Grade Beam No. 1	1-3	1452.27	✻✻		✻✻	160	Pipe 12.75"x0.375"
Grade Beam No. 1	4-6	1451.84	✻✻		✻✻	160	Pipe 12.75"x0.375"
Abutment No. 1	1-4	1444.81	✻✻		✻✻	120	Pipe 12.75"x0.375"
Abutment No. 1	5-12	1444.81	✻✻		✻✻	220	Pipe 12.75"x0.375"
Pier No. 1	1-38	1424.52	✻✻		✻✻	290	Concrete Filled Pipe 16"x0.5"
Pier No. 2	1-38	1424.58	✻✻		✻✻	290	Concrete Filled Pipe 16"x0.5"
Pier No. 3	1-38	1424.84	✻✻		✻✻	290	Concrete Filled Pipe 16"x0.5"
Pier No. 4	1-38	1424.78	✻✻		✻✻	290	Concrete Filled Pipe 16"x0.5"
Pier No. 5	1-38	1424.79	✻✻		✻✻	290	Concrete Filled Pipe 16"x0.5"
Pier No. 6	1-38	1424.87	✻✻		✻✻	290	Concrete Filled Pipe 16"x0.5"
Pier No. 7	1-38	1424.64	✻✻		✻✻	290	Concrete Filled Pipe 16"x0.5"
Pier No. 8	1-38	1424.60	✻✻		✻✻	290	Concrete Filled Pipe 16"x0.5"
Abutment No. 2	1-4	1444.90	✻✻		✻✻	120	Pipe 12.75"x0.375"
Abutment No. 2	5-12	1444.90	✻✻		✻✻	220	Pipe 12.75"x0.375"
Grade Beam No. 2	1-3	1451.92	✻✻		✻✻	160	Pipe 12.75"x0.375"
Grade Beam No. 2	4-6	1452.34	✻✻		✻✻	160	Pipe 12.75"x0.375"

✻✻ Pile lengths shown are tentative lengths. Final pile order length and penetration below cut-off elevation shall be determined based on the results of test pile installations.

TEST PILE DATA

LOCATION	PILE NUMBER	CUT-OFF ELEVATION	PILE ORDER LENGTH (feet)	DESIGN PILE BEARING (kips/pile)
Grade Beam No. 1	0	0	160	0
Abut. No. 1	0	1444.81	120	0
Abut. No. 1	0	1444.81	220	0
Pier No. 1	0	1424.52	290	0
Pier No. 2	0	1424.58	290	0
Pier No. 3	0	1424.84	290	0
Pier No. 4	0	1424.78	290	0
Pier No. 5	0	1424.79	290	0
Pier No. 6	0	1424.87	290	0
Pier No. 7	0	1424.64	290	0
Pier No. 8	0	1424.60	290	0
Abut. No. 2	0	1444.90	120	0
Abut. No. 2	0	1444.90	220	0
Grade Beam No. 2	0	0	160	0

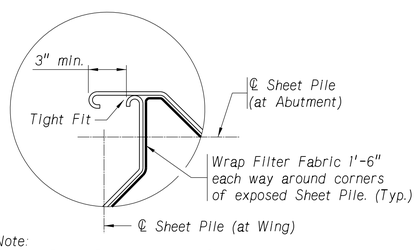

Note:
Corner Filter Fabric shall be Subsidiary to the pay item "STEEL SHEET PILING".

SHEET PILE CORNER DETAIL (TYP.)

Not to Scale

Sheet Pile Corner Detail shown for 90° corner. The Contractor shall develop similar detail for obtuse corner based on final sheet pile section. Submit detail for approval with sheet pile shop plan.

As a minimum, all steel sheet piling shall conform to ASTM A572 (Grade 50) steel and shall meet the following requirements:

Section Length	34.00 ft.
Maximum Section Depth	16 in.
Minimum Section Thickness	0.3125 in.
Elastic Section Modulus	27.5 in^3/ft

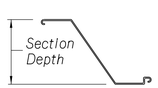

The Contractor shall submit for approval a shop plan of the sheet pile layout showing all pertinent dimensions, details, and section properties.

The pay quantity will be based on the sheet pile wall dimensions shown. The constructed wall length will be within ± 2'-0" of the sheet pile wall dimensions shown.

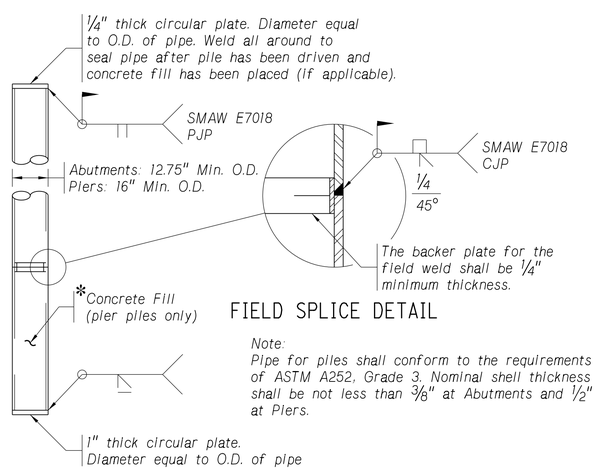

FIELD SPLICE DETAIL

Note:
Pipe for piles shall conform to the requirements of ASTM A252, Grade 3. Nominal shell thickness shall be not less than 3/8" at Abutments and 1/2" at Piers.

PIPE PILE DETAIL

Not to Scale

NOTES:

All pile spacing is given at the bottom of concrete.

Piers are designed for scour to elevation 1413.0 ft. for 100-Year Flood
Piers are checked for scour to elevation 1406.0 ft. for 500-Year Flood

Pile order lengths (with the exception of those shown for the test piles) are tentative. The final order lengths shall be based on the results obtained from the test pile driving. The driving of the test pile will be monitored with a Pile Driving Analyzer. Final order lengths will be provided by the Engineer to the Contractor within three (3) working days after the test pile driving is complete.

Test piles will be driven, as shown in the TEST PILE DATA table.

At the Engineer's option, additional piling may be monitored with the Pile Driving Analyzer.

The use of the Pile Driving Analyzer will require the Contractor to set up the hammer for driving. The Contractor shall bolt two accelerometers and two strain transducers to the pile before driving is started. The holes or anchors for the accelerometers and strain transducers will have been predrilled by Department personnel while the pile is still on the ground. The Contractor may be required to stop the hammer for wave speed determination after the first few blows.

The Contractor shall drive the pile until the tranducers are near the surface of the ground, or as directed by the Engineer, at which time the Contractor shall stop the hammer for the removal of the accelerometers and strain transducers. The Contractor shall continue driving the pile to cut-off or as directed by the Engineer.

The time delay in driving each pile being monitored by the Pile Driving Analyzer will normally range from 30 to 60 minutes. The Contractor shall provide access to the pile driving area for the Engineer's equipment vehicle (light truck). The work performed by the Contractor, in conjunction with the use of the Pile Driving Analyzer, as described herein, shall not be paid for directly, but shall be considered subsidiary to items for which direct payment is made.

*Concrete Filled Pipe Piles at piers shall conform to the requirements of Section 703 for "Steel Piling" and "Cast-In-Place Concrete Piles". Concrete fill shall be placed with a tremie and shall be Class "47B" with a 28-day strength of 3,000 psi. Concrete fill shall be considered subsidiary to the Pay Item "PIPE PILING".

BURNS McDONNELL

BRIDGE DIVISION.
Computer: B720560
User: nmfischer
Date: 10-JUL-2023 17:17
File: S030_37773L_CPG

PRELIMINARY PLAN
NOT FINAL - SUBJECT TO CHANGE

PROJECT NUMBER	SHEET NO.
NH-30-5(131)	S55

C.N. 31983
STRUCTURE NUMBER S030 37773L

GIRDER SEAT ELEVATIONS			
Girder A	Girder B	Girder C	Girder D
1448.57	1448.80	1449.02	1449.25

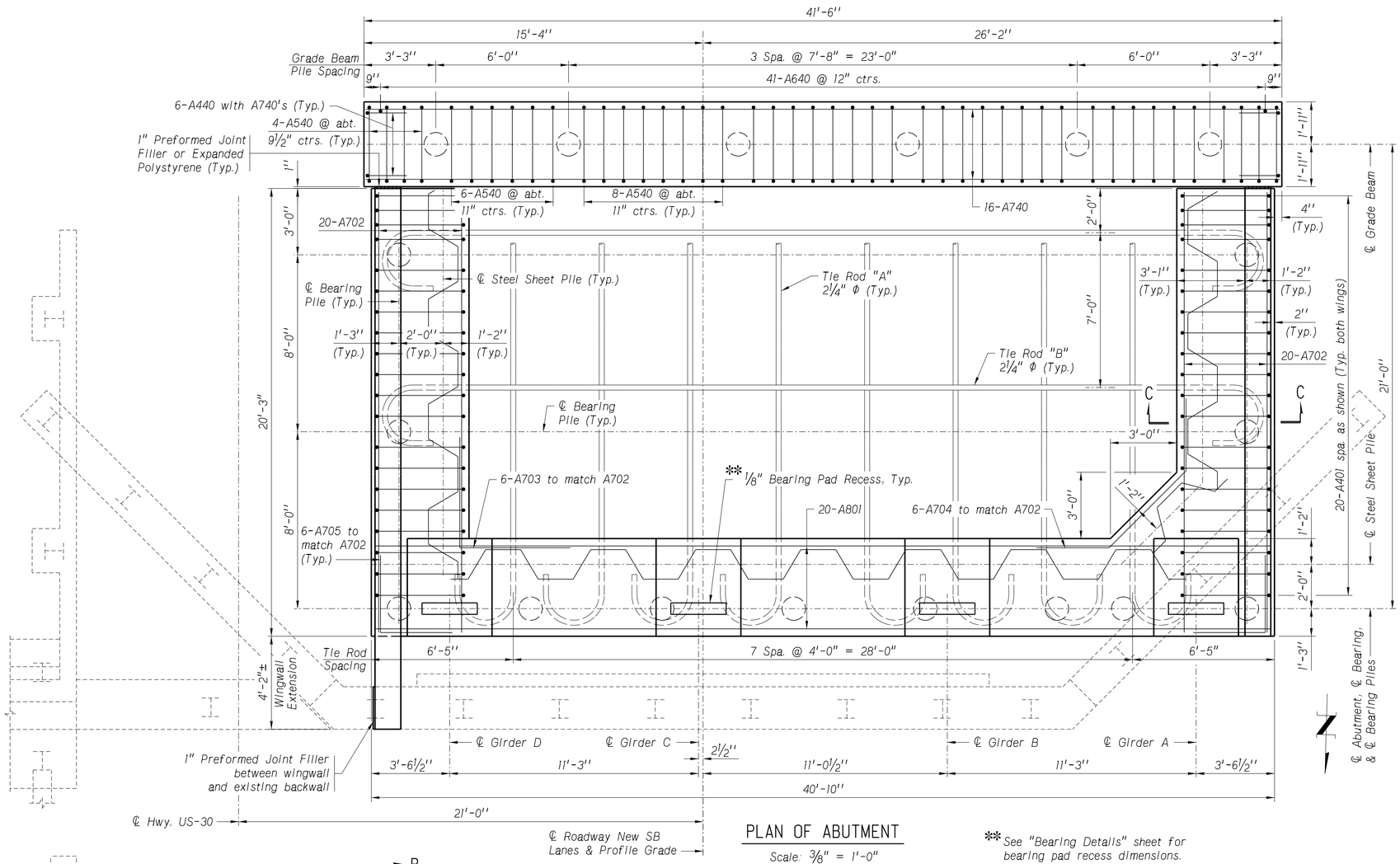

PLAN OF ABUTMENT
Scale: ⅜" = 1'-0"

** See "Bearing Details" sheet for bearing pad recess dimensions.

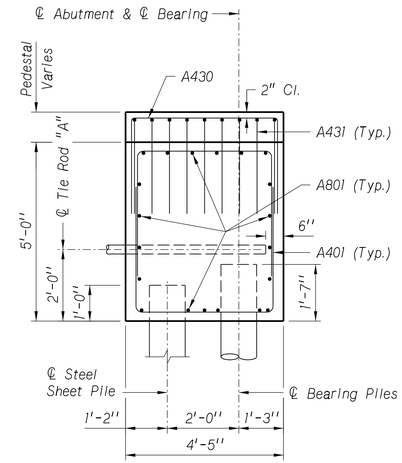

SECTION A-A
Scale: ½" = 1'-0"

NOTES:

See sheet 14 of 42 for Section C-C.

See sheet 4 of 42 for existing abutment removal elevation.

See sheet 17 of 42 for details of 2" plastic pipe through abutment cap.

Upper wing reinforcing not shown for clarity. See sheet 16 of 42.

Pedestals shall be poured monolithically with abutment. See sheet 15 of 42 for pedestal reinforcing.

Tie Rod turnbuckles and upsets not shown for clarity. See sheet 15 of 42.

Burn 1½" Φ holes in sheet piling as needed for A401 bars. A401 bars may be shifted up to 1" to clear tie rods.

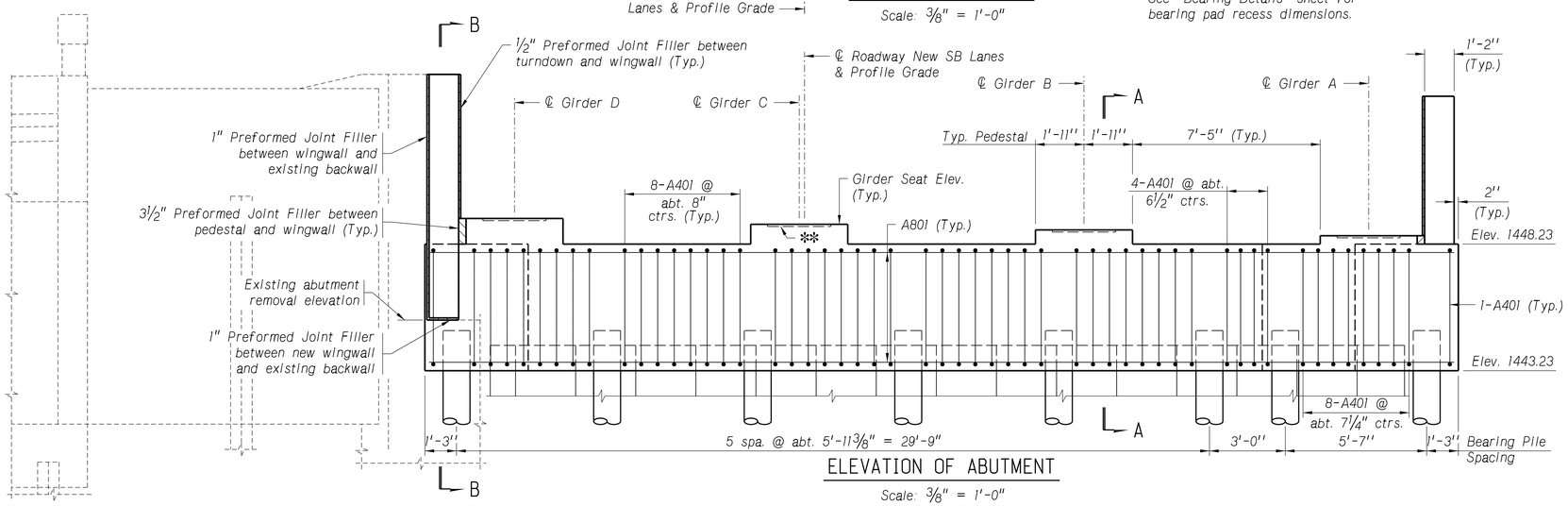

ELEVATION OF ABUTMENT
Scale: ⅜" = 1'-0"

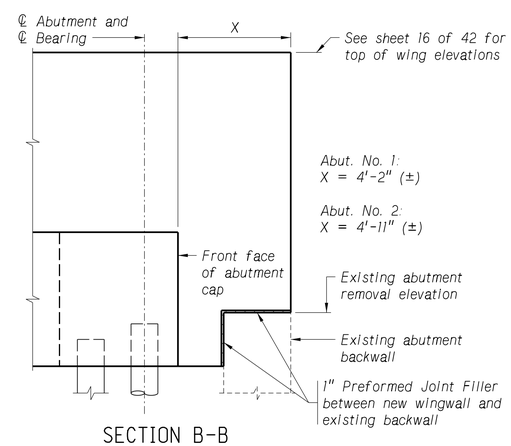

SECTION B-B
Scale: ⅜" = 1'-0"
Reinforcing not shown for clarity.

BURNS McDONNELL

BRIDGE ENGINEER

1,289'-10" 9-SPAN
WELDED PLATE GIRDER BRIDGE
ABUTMENT 1 PLAN & ELEVATION

COUNTY PLATTE
HWY. NO. US 30
REF. POST. 377.73L
STA. 4091+22.09

LOCATION COLUMBUS SOUTH
SKEW 0°
ROADWAY 28'-0"
DESIGN LIVE LOAD HL-93

DESIGNED BY ASF
DETAILED BY TWM
CHECKED BY CBM
DATE JUL 2023

NEBRASKA DEPARTMENT OF TRANSPORTATION - BRIDGE DIVISION

NEBRASKA
Good Life. Great Journey.
DEPARTMENT OF TRANSPORTATION

SPECIAL PLAN NO. 2

BRIDGE DIVISION.
Computer: B720560
User: nmfischer
Date: 10-JUL-2023 17:18
File: S030_37773L_CPG

PRELIMINARY PLAN
NOT FINAL - SUBJECT TO CHANGE

PROJECT NUMBER	SHEET NO.
NH-30-5(131)	S56

C.N. 31983

STRUCTURE NUMBER
S030 37773L

BRIDGE ENGINEER

GIRDER SEAT ELEVATIONS			
Girder A	Girder B	Girder C	Girder D
1448.65	1448.88	1449.10	1449.33

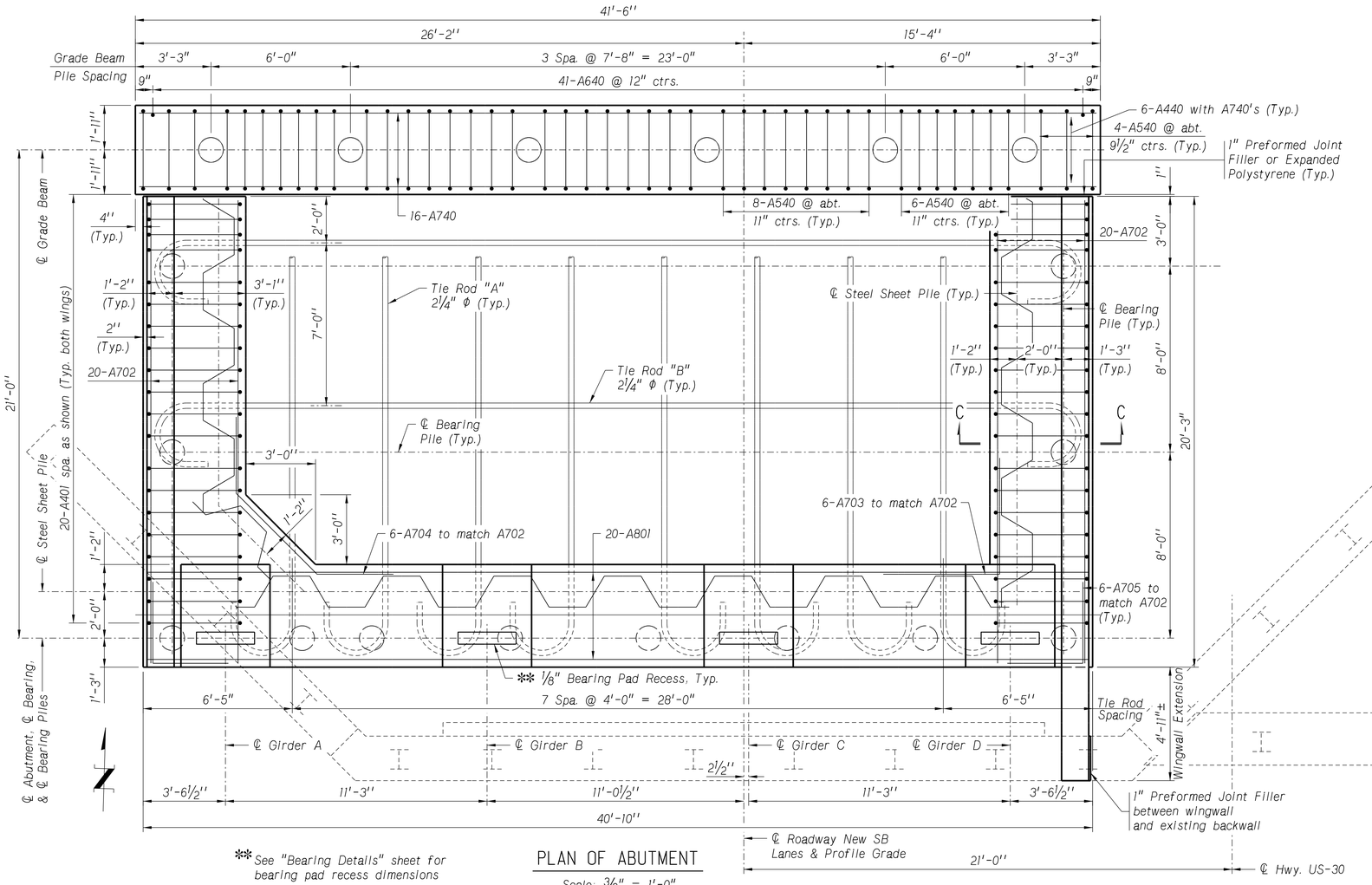

** See "Bearing Details" sheet for bearing pad recess dimensions

PLAN OF ABUTMENT

Scale: ⅜" = 1'-0"

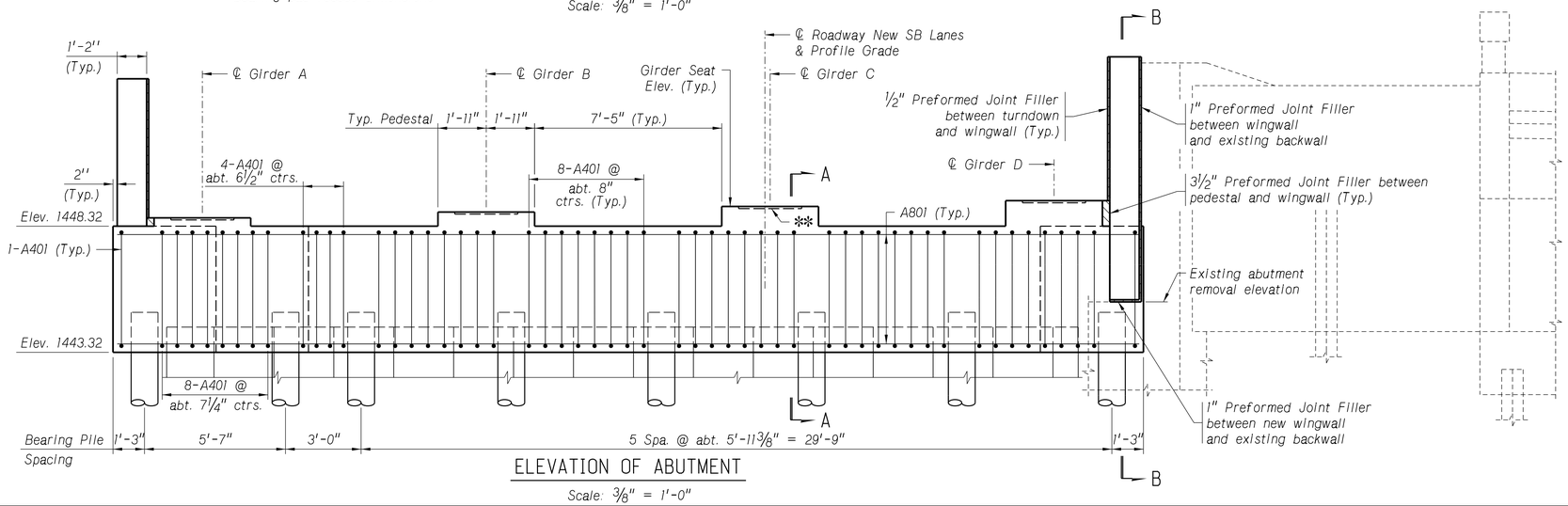

ELEVATION OF ABUTMENT

Scale: ⅜" = 1'-0"

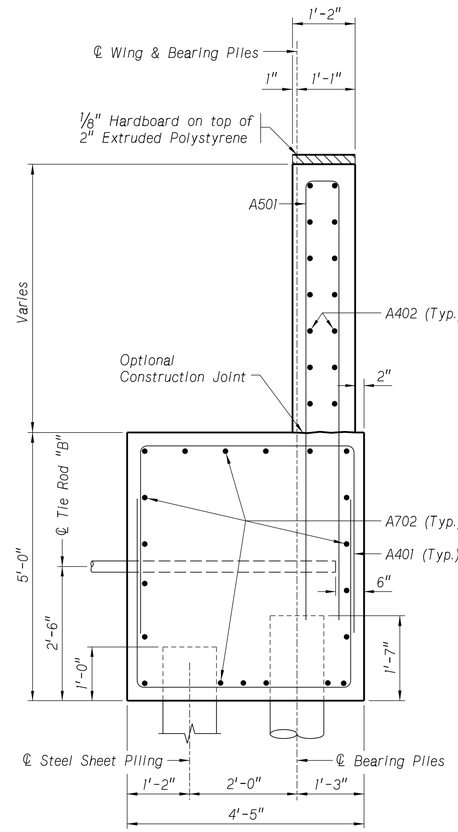

SECTION C-C

Not to Scale

NOTES:

See sheet 13 of 42 for Section A-A and B-B.

See sheet 5 of 42 for existing abutment removal elevation.

See sheet 17 of 42 for details of 2" plastic pipe through abutment cap.

Upper wing reinforcing not shown in plan view for clarity. See sheet 16 of 42.

Pedestals shall be poured monolithically with abutment. See sheet 15 of 42 for pedestal reinforcing.

Tie Rod turnbuckles and upsets not shown for clarity. See sheet 15 of 42.

Burn 1½" ϕ holes in sheet piling as needed for A401 bars. A401 bars may be shifted up to 1" to clear tie rods.

BURNS McDONNELL

1,289'-10" 9-SPAN
WELDED PLATE GIRDER BRIDGE
ABUTMENT 2 PLAN & ELEVATION

COUNTY PLATTE
HWY. NO. US 30
REF. POST. 377.73L
STA. 409+22.09

LOCATION COLUMBUS SOUTH
SKEW 0°
ROADWAY 28'-0"
DESIGN LIVE LOAD HL-93

DESIGNED BY ASF
DETAILED BY TWM
CHECKED BY CBM
DATE JUL 2023

NEBRASKA DEPARTMENT OF TRANSPORTATION - BRIDGE DIVISION

NEBRASKA
Good Life. Great Journey.
DEPARTMENT OF TRANSPORTATION

SPECIAL PLAN NO. 2

BRIDGE DIVISION.
Computer: B713227
User: asferdon
Date: 10-JUL-2023 22:27
File: S030_37773L_CPG

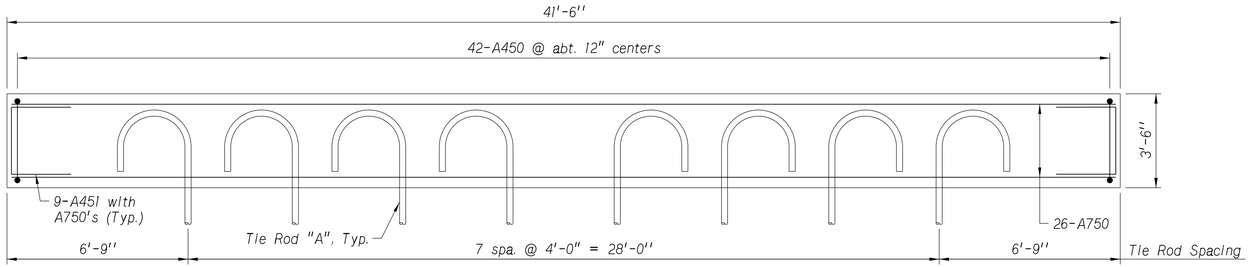

PLAN OF ANCHOR BLOCK

Scale: 3/8" = 1'-0"

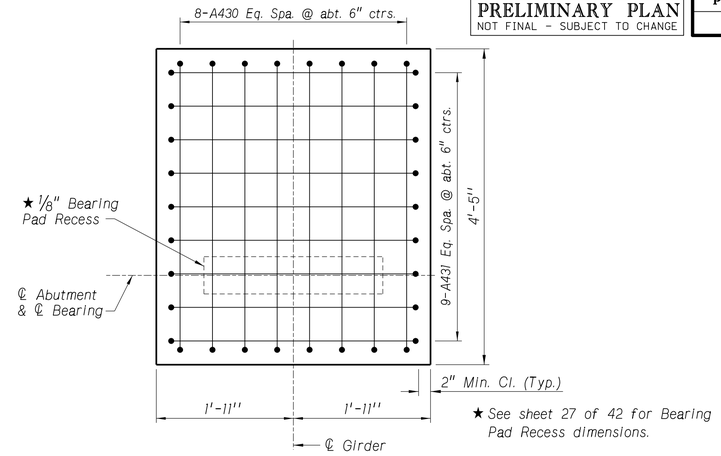

PLAN OF PEDESTAL

Not to Scale

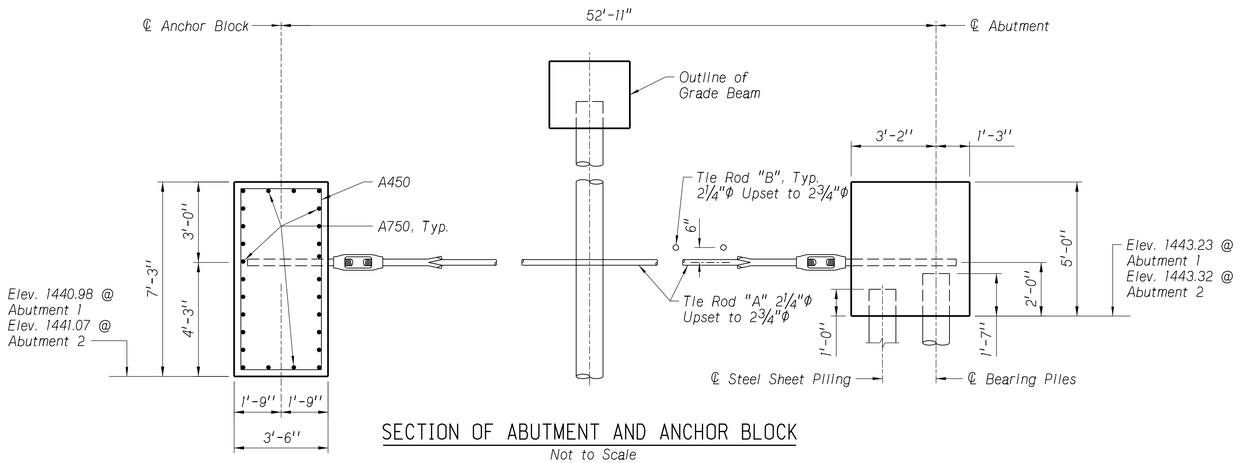

SECTION OF ABUTMENT AND ANCHOR BLOCK

Not to Scale

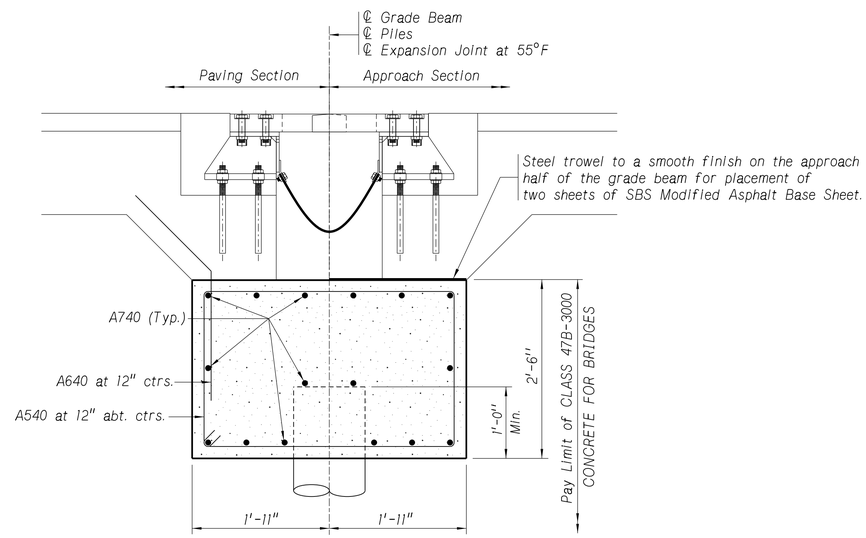

GRADE BEAM SECTION

Not to Scale

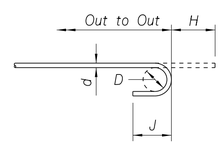

TIE ROD HOOK DETAIL

Not to Scale

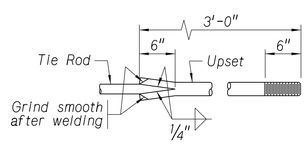

TIE ROD UPSET DETAIL

Not to Scale

Tie Rod Hook Dimensions			
d	D	H	J
2 3/4"	2'-3 1/2"	3'-6"	2'-3 1/2"

Note: As an alternate, the entire tie rod may be of the size shown for the upset.

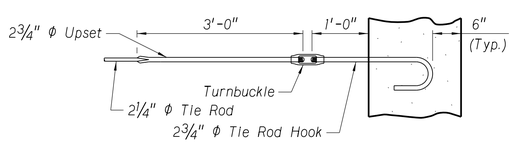

DETAIL FOR TURNBUCKLES

Not to Scale

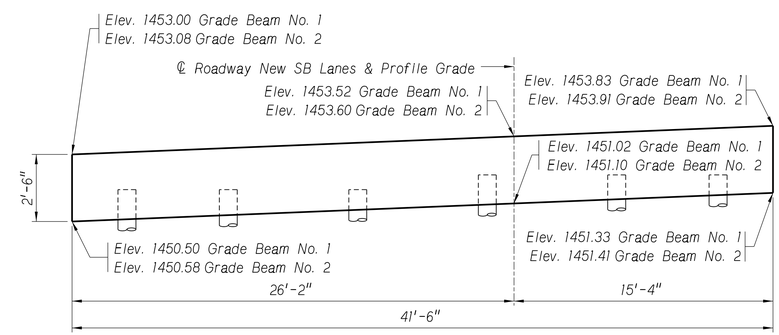

GRADE BEAM ELEVATION

Facing North
Not to Scale

NOTES:

SBS Modified Asphalt Base Sheet shall be modified bitumen roofing material, with a minimum thickness of 0.090 inches and a minimum weight of 60 lbs. per 100 square feet.

Tie rods shall conform to ASTM A709/A709M Grade 36 Steel. Turnbuckles shall conform to ASTM A668/A668M, Class C.

After fabrication, tie rods, turnbuckles, and all other hardware shall be galvanized according to ASTM A123/A123M.

BURNS McDONNELL

1,289'-10" 9-SPAN
WELDED PLATE GIRDER BRIDGE
ABUTMENT, ANCHOR BLOCK, & GRADE BEAM DETAILS

COUNTY PLATTE
HWY. NO. US 30
REF. POST. 377.73L
STA. 409+22.09

LOCATION COLUMBUS SOUTH
SKEW 0°
ROADWAY 28'-0"
DESIGN LIVE LOAD HL-93

DATE JUL 2023
DESIGNED BY ASF
DETAILED BY TWM
CHECKED BY CBM

NEBRASKA DEPARTMENT OF TRANSPORTATION - BRIDGE DIVISION

NEBRASKA
Good Life. Great Journey.
DEPARTMENT OF TRANSPORTATION

SPECIAL PLAN NO. 2

BRIDGE DIVISION.
Computer: B720560
User: nmfischer
Date: 07-JUL-2023 13:12
File: S030_37773L.CPG

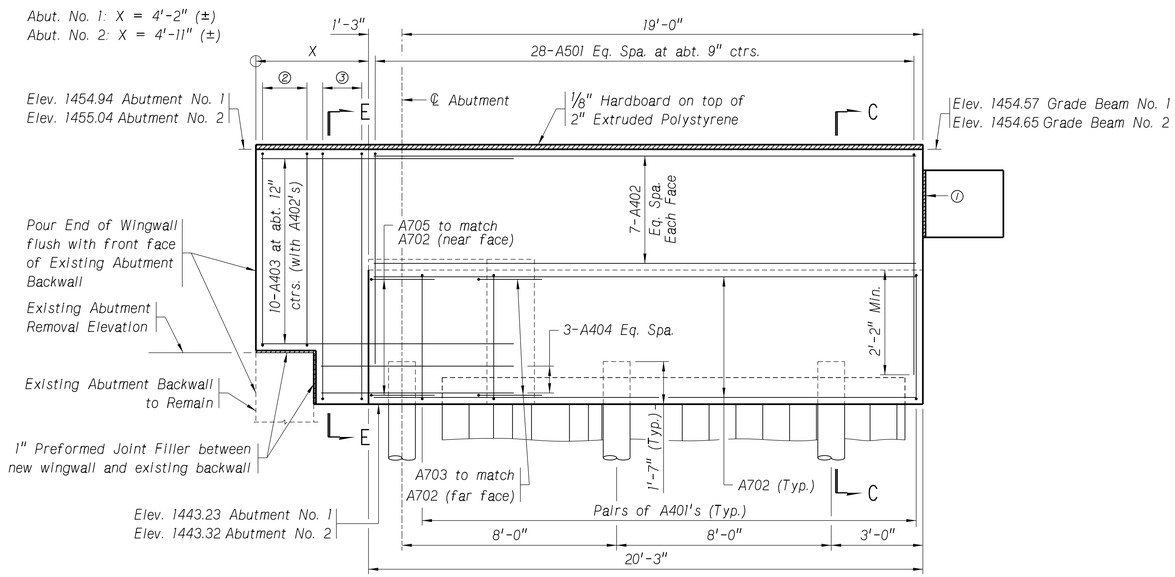

ELEVATION OF EAST ABUTMENT WINGS AND GRADE BEAM

Abutment 2 shown - Abutment 1 similar
Not to Scale

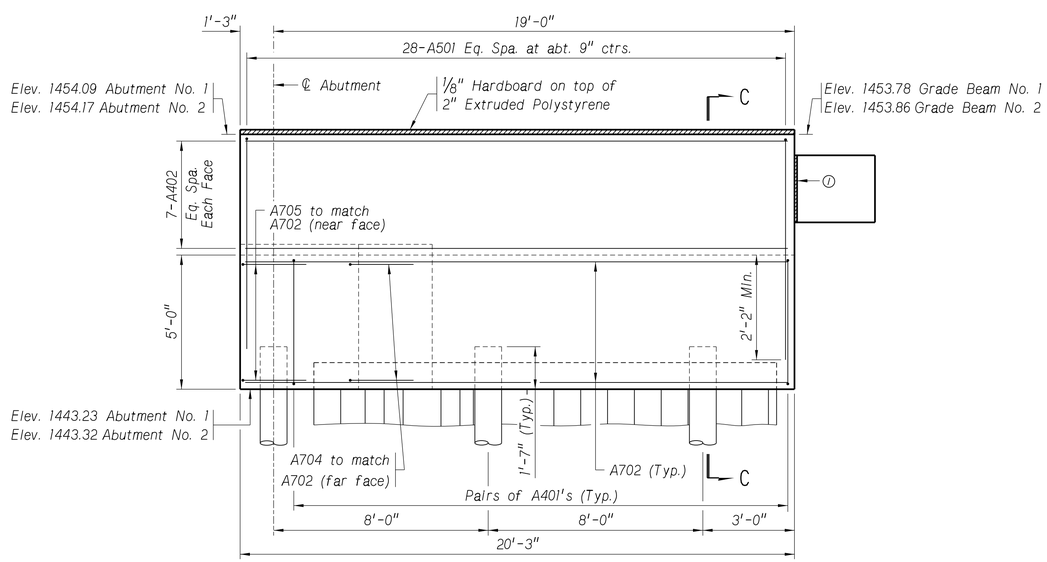

ELEVATION OF WEST ABUTMENT WINGS AND GRADE BEAM

Abutment 1 shown - Abutment 2 similar
Not to Scale

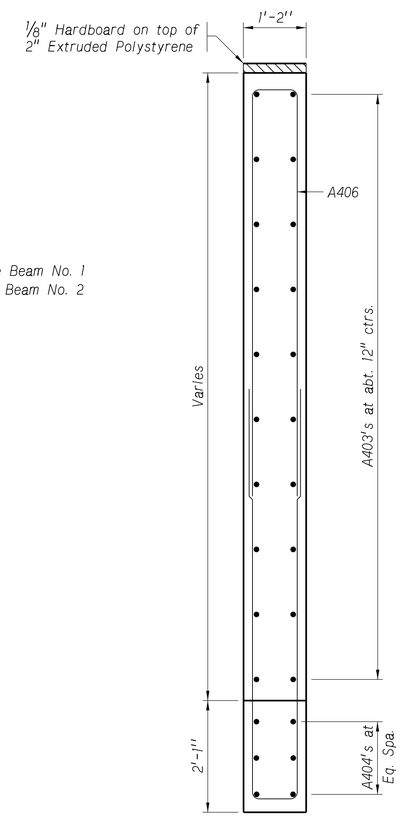

SECTION E-E

Not to Scale

NOTES:

See sheet 14 of 42 for Section C-C.

See sheets 4 & 5 of 42 for existing abutment removal elevation.

① 1" Joint Filler or Expanded Polystyrene between grade beam and wing wall, typ.

② 3-A405 Eq. Spa.

③ 3-A406 Eq. Spa.

BILL OF BARS

	MARK	NO.	LENGTH	TYPE	"A"	"B"	"C"	"D"	"E"	PIN	HOOK	WEIGHT LB
ABUTMENT NO. 1	A801	20	40'-4"	STR								2,154
	A702	40	19'-9"	STR								1,615
	A703	6	9'-10"	104	4'-11"	4'-11"				5¼"		121
	A704	6	14'-4"	106	4'-11"	4'-5¾"	3'-6¾"	3'-6¾"	4'-11"	5¼"		176
	A705	12	9'-10"	104	4'-11"	4'-11"				5¼"		241
	A740	16	41'-0"	STR								1,341
	A750	26	41'-0"	STR								2,179
	A640	41	4'-6"	101	2'-3"	2'-3"	1'-7"			4½"		277
	A501	56	18'-0"	103	8'-8"	0'-8"	8'-8"			2½"		1,051
	A540	44	11'-7"	107	2'-0"	3'-4"				2½"	5½"	532
	A401	94	21'-10"	108	3'-6"	3'-11"	3'-6"	2'-6"		2"		1,371
	A402	28	19'-9"	STR								369
	A403	10	16'-1"	103	7'-9"	0'-7"	7'-9"			3"		107
	A404	3	11'-1"	103	5'-3"	0'-7"	5'-3"			3"		22
	A405	3	24'-4"	108	5'-9"	0'-8"	5'-9"	2'-3"		2"		49
	A406	3	28'-4"	108	6'-9"	0'-8"	6'-9"	2'-3"		2"		57
	A430	32	7'-5"	103	1'-8"	4'-1"	1'-8"			2"		159
	A431	36	6'-10"	103	1'-8"	3'-6"	1'-8"			2"		164
	A440	12	5'-3"	103	1'-8"	1'-10¾"	1'-8"			2"		42
	A450	42	20'-3"	107	6'-9"	3'-0"				2"	4½"	568
	A451	18	7'-3"	103	2'-2"	2'-11"	2'-2"			2"		87
											SUBTOTAL =	12,682 LB
ABUTMENT NO. 2	A801	20	40'-4"	STR								2,154
	A702	40	19'-9"	STR								1,615
	A703	6	9'-10"	104	4'-11"	4'-11"				5¼"		121
	A704	6	14'-4"	106	4'-11"	4'-5¾"	3'-6¾"	3'-6¾"	4'-11"	5¼"		176
	A705	12	9'-10"	104	4'-11"	4'-11"				5¼"		241
	A740	16	41'-0"	STR								1,341
	A750	26	41'-0"	STR								2,179
	A640	41	4'-6"	101	2'-3"	2'-3"	1'-7"			4½"		277
	A501	56	18'-0"	103	8'-8"	0'-8"	8'-8"			2½"		1,051
	A540	44	11'-7"	107	2'-0"	3'-4"				2½"	5½"	532
	A401	94	21'-10"	108	3'-6"	3'-11"	3'-6"	2'-6"		2"		1,371
	A402	28	19'-9"	STR								369
	A403	10	16'-1"	103	7'-9"	0'-7"	7'-9"			3"		107
	A404	3	11'-1"	103	5'-3"	0'-7"	5'-3"			3"		22
	A405	3	24'-4"	108	5'-9"	0'-8"	5'-9"	2'-3"		2"		49
	A406	3	28'-4"	108	6'-9"	0'-8"	6'-9"	2'-3"		2"		57
	A430	32	7'-5"	103	1'-8"	4'-1"	1'-8"			2"		159
	A431	36	6'-10"	103	1'-8"	3'-6"	1'-8"			2"		164
	A440	12	5'-3"	103	1'-8"	1'-10¾"	1'-8"			2"		42
	A450	42	20'-3"	107	6'-9"	3'-0"				2"	4½"	568
	A451	18	7'-3"	103	2'-2"	2'-11"	2'-2"			2"		87
											SUBTOTAL =	12,682 LB
											TOTAL =	25,364 LB

NOTE: FOR BENDING DIAGRAMS, HOOK LENGTHS, & PIN DIAMETERS SEE SHEET 42 OF 42.

PRELIMINARY PLAN
NOT FINAL - SUBJECT TO CHANGE

BURNS McDONNELL

PROJECT NUMBER	SHEET NO.
NH-30-5(131)	S58

C.N. 31983

STRUCTURE NUMBER
S030 37773L

BRIDGE ENGINEER

1,289'-10" 9-SPAN
WELDED PLATE GIRDER BRIDGE
ABUTMENT WING DETAILS & BILL OF BARS

COUNTY PLATTE
HWY. NO. US 30
REF. POST. 377.73L
STA. 409+22.09

LOCATION COLUMBUS SOUTH
SKEW 0°
ROADWAY 28'-0"
DESIGN LIVE LOAD HL-93

DESIGNED BY ASF
DETAILED BY TWM
CHECKED BY CBM
DATE JUL 2023

NEBRASKA DEPARTMENT OF TRANSPORTATION - BRIDGE DIVISION

NEBRASKA
Good Life. Great Journey.
DEPARTMENT OF TRANSPORTATION

SPECIAL PLAN NO. 2

BRIDGE DIVISION.
Computer: B720560
User: nmfischer
Date: 07-JUL-2023 13:12
File: S030_37773L_CPG

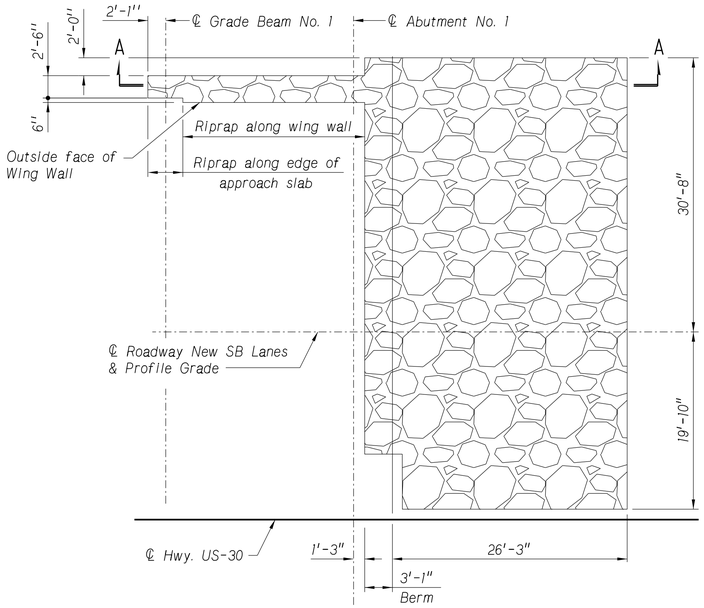

PLAN OF ROCK RIPRAP
Abutment No. 1
Not to Scale

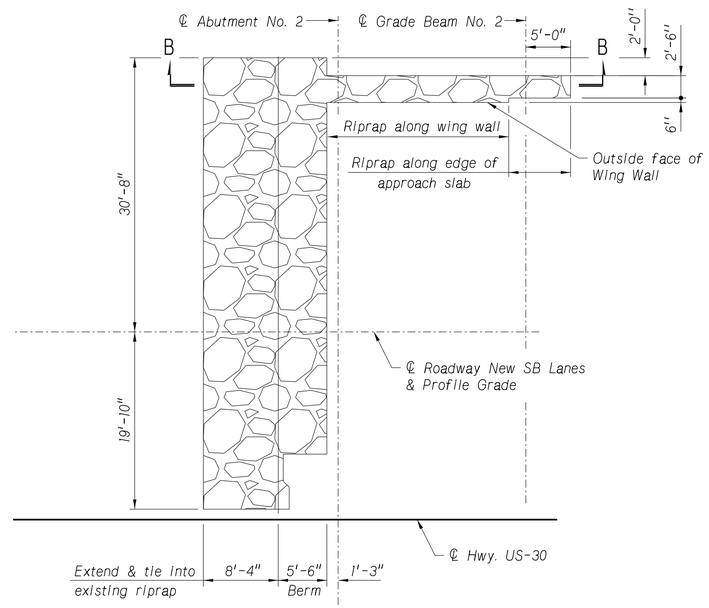

PLAN OF ROCK RIPRAP
Abutment No. 2
Not to Scale

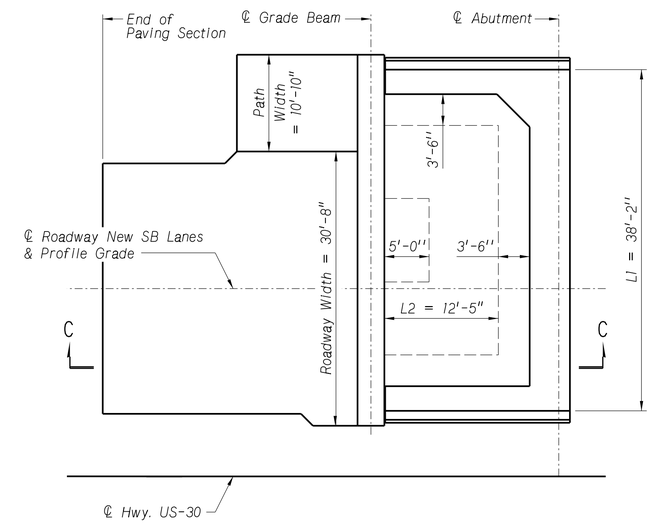

PLAN OF GRANULAR BACKFILL
Abutment 1 shown, Abutment 2 similar.
Not to Scale

The pay limit quantity for Granular Backfill, per Abutment, has been established using the following equation:

$$\text{Quantity } (yd^3) = \frac{\text{Area 1} \times [L1 + (2 \times L2)]}{27} + \frac{\text{Area 2} \times (\text{Roadway Width})}{27} + \frac{\text{Area 3} \times (\text{Path Width})}{27}$$

* The Granular Backfill in this area shall be placed in 8 inch layers and compacted by a single pass of a walk-behind, lightweight (approx. 100 lbs.) mechanical tamper, roller, or vibratory compactor. There is no density requirement. Heavy compaction equipment shall not be used in this area. Flooding the granular backfill with water is not allowed.

** The Granular Backfill in this area shall be compacted in accordance with the Standard Specifications.

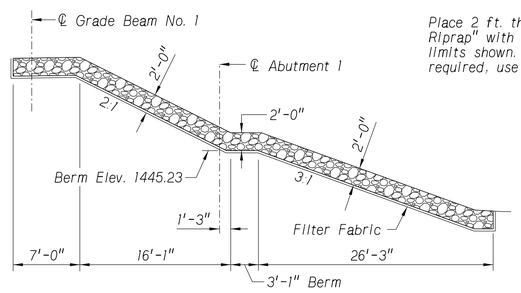

SECTION A-A
Not to Scale

Place 2 ft. thick "Broken Concrete Riprap" with filter fabric to the limits shown. If additional material is required, use "Type B Rock Riprap."

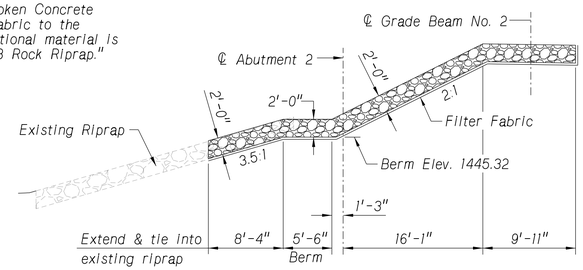

SECTION B-B
Not to Scale

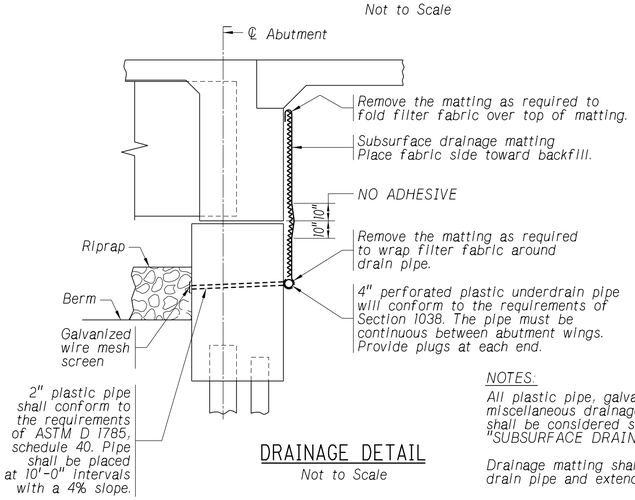

DRAINAGE DETAIL
Not to Scale

NOTES:
All plastic pipe, galvanized wire screen, and miscellaneous drainage items at the abutments shall be considered subsidiary to the Pay Item, "SUBSURFACE DRAINAGE MATTING".

Drainage matting shall wrap around sloping drain pipe and extend 3ft. along the wings.

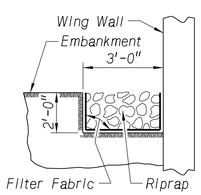

NOTE:
The average size of riprap shall be 0.25 cu. ft., or 35 lbs.

WING RIPRAP DETAIL
Not to Scale

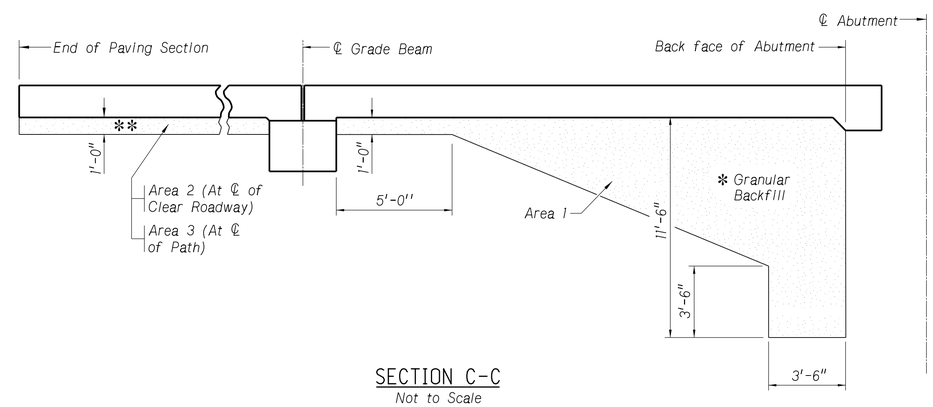

SECTION C-C
Not to Scale

BURNS McDONNELL

BRIDGE ENGINEER

1,289'-10" 9-SPAN
WELDED PLATE GIRDER BRIDGE
ABUTMENT RIPRAP & GRANULAR BACKFILL DETAILS

LOCATION COLUMBUS SOUTH
SKEW 0°
ROADWAY 28'-0"
DESIGN LIVE LOAD HL-93
DATE JUL 2023
DETAILED BY TWM
CHECKED BY SDH
DESIGNED BY ASF

COUNTY PLATTE
HWY. NO. US 30
REF. POST. 377.73L
STA. 4094+22.09

NEBRASKA DEPARTMENT OF TRANSPORTATION - BRIDGE DIVISION

NEBRASKA
Good Life. Great Journey.
DEPARTMENT OF TRANSPORTATION

BRIDGE DIVISION.
Computer: B720560
User: nmfischer
Date: 07-JUL-2023 13:13
File: S030_37773L_CPG

PRELIMINARY PLAN
NOT FINAL - SUBJECT TO CHANGE

PROJECT NUMBER	SHEET NO.
NH-30-5(131)	S60

C.N. 31983

STRUCTURE NUMBER
S030 37773L

BRIDGE ENGINEER

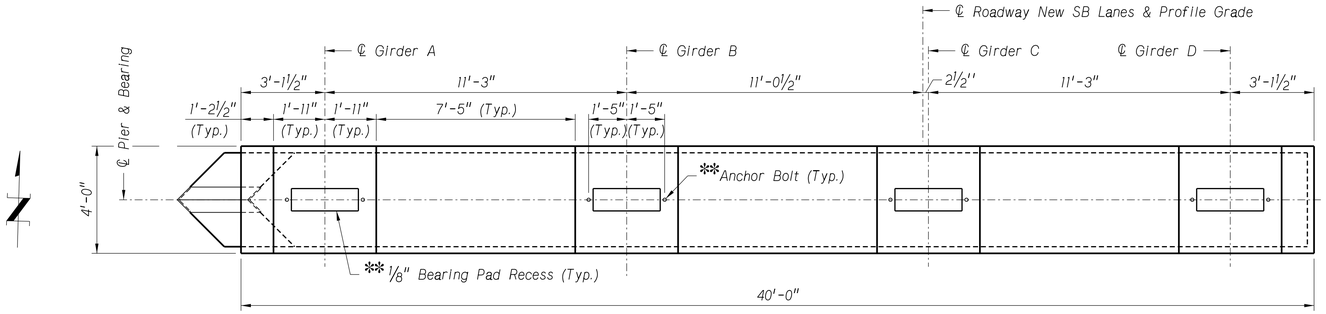

PLAN OF PIER CAP

Scale: 3/8" = 1'-0"

PIER DIMENSIONS AND ELEVATIONS								
LOCATION	Elev. F	Elev. G	Elev. H	Elev. J	H1	H2	W1	W2
Pier No. 1	1449.27	1445.77	1428.52	1422.52	26'-9"	17'-3"	41.66'	5.17'
Pier No. 2	1451.25	1447.75	1428.58	1422.58	28'-8"	19'-2"	41.90'	4.93'
Pier No. 3	1452.59	1449.09	1428.84	1422.84	29'-9"	20'-3"	42.03'	4.80'
Pier No. 4	1453.28	1449.78	1428.78	1422.78	30'-6"	21'-0"	42.13'	4.71'
Pier No. 5	1453.29	1449.79	1428.79	1422.79	30'-6"	21'-0"	42.13'	4.71'
Pier No. 6	1452.62	1449.12	1428.87	1422.87	29'-9"	20'-3"	42.03'	4.80'
Pier No. 7	1451.31	1447.81	1428.64	1422.64	28'-8"	19'-2"	41.90'	4.93'
Pier No. 8	1449.35	1445.85	1428.60	1422.60	26'-9"	17'-3"	41.66'	5.17'

◑ See Nose Armor Angle details on sheet 20 of 42.

✻ See "Geological Profile & Pile Layout", sheets 8-11 of 42, for pile spacing. See "Pile Notes & Data", sheet 12 of 42, for depth and concrete fill requirements.

✻✻ See "Bearing Details", sheet 28 of 42, for anchor bolt details and bearing pad recess dimensions.

✻✻✻✻ Pedestals shall be poured monolithically with the pier.

GIRDER SEAT ELEVATIONS				
LOCATION	Girder A	Girder B	Girder C	Girder D
Pier No. 1	1449.77	1450.00	1450.22	1450.45
Pier No. 2	1451.73	1451.95	1452.18	1452.40
Pier No. 3	1453.06	1453.29	1453.51	1453.74
Pier No. 4	1453.75	1453.98	1454.20	1454.43
Pier No. 5	1453.76	1453.99	1454.21	1454.44
Pier No. 6	1453.10	1453.32	1453.55	1453.77
Pier No. 7	1451.79	1452.01	1452.24	1452.46
Pier No. 8	1449.85	1450.08	1450.30	1450.53

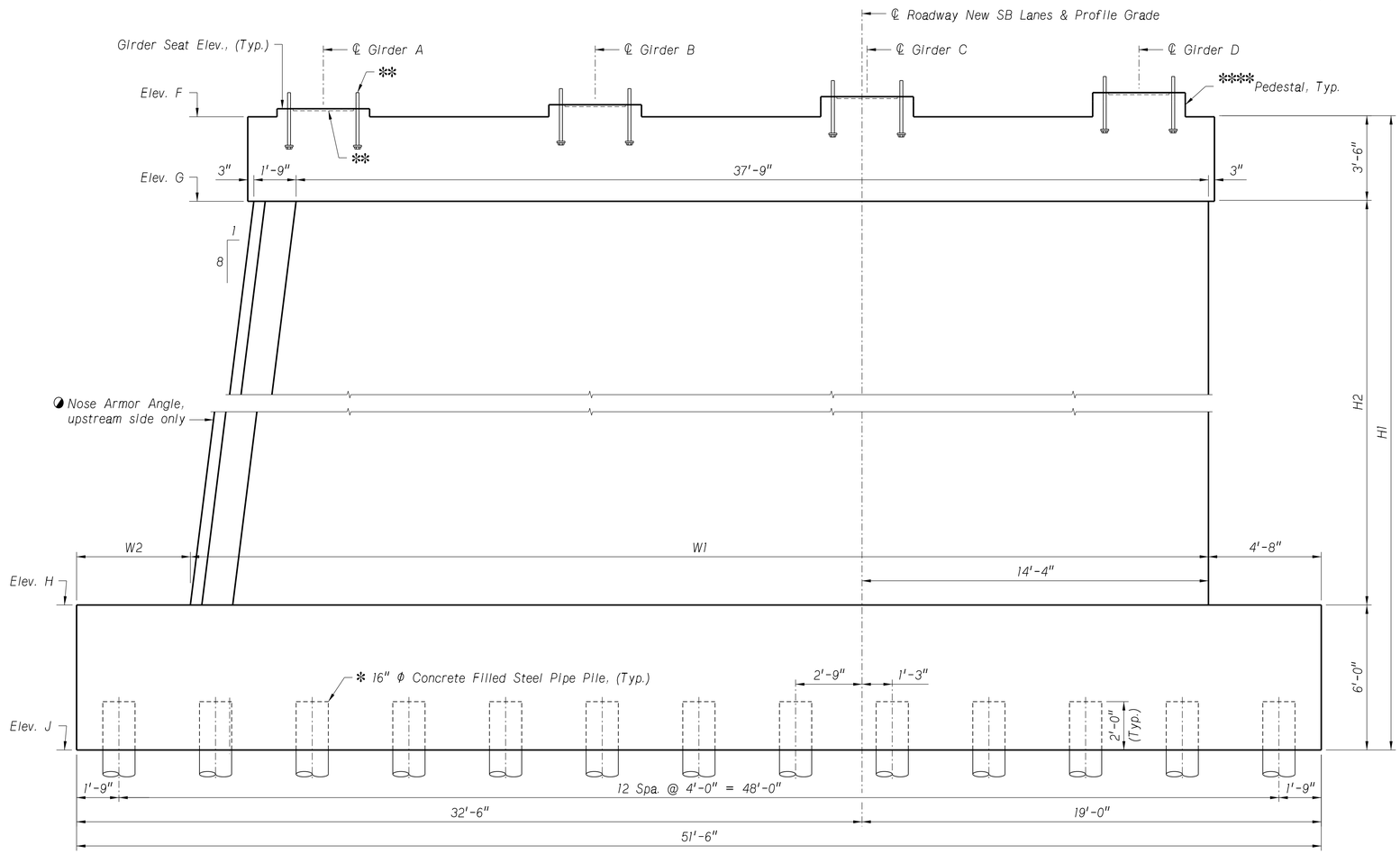

FRONT ELEVATION OF PIER

Facing North
Scale: 3/8" = 1'-0"

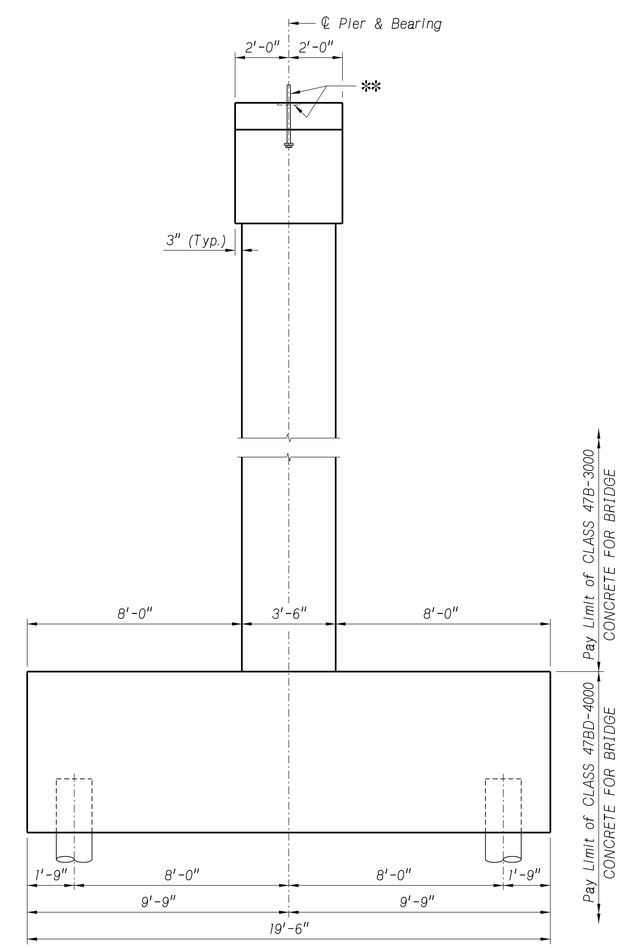

SIDE ELEVATION OF PIER

Scale: 3/8" = 1'-0"

BURNS McDONNELL

1,289'-10" 9-SPAN
WELDED PLATE GIRDER BRIDGE
PIER PLAN & ELEVATION

COUNTY PLATTE
HWY. NO. US 30
REF. POST. 377.73L
STA. 4094+22.09

LOCATION COLUMBUS SOUTH
SKEW 0°
ROADWAY 28'-0"
DESIGN LIVE LOAD HL-93

DESIGNED BY YZ
DETAILED BY NMF
CHECKED BY ASF
DATE JUL 2023

NEBRASKA DEPARTMENT OF TRANSPORTATION - BRIDGE DIVISION

NEBRASKA
Good Life. Great Journey.
DEPARTMENT OF TRANSPORTATION

SPECIAL PLAN NO. 2

BRIDGE DIVISION.
Computer: B720560
User: nmfischer
Date: 07-JUL-2023 16:48
File: S030_37773L_CPG

PRELIMINARY PLAN
NOT FINAL - SUBJECT TO CHANGE

PROJECT NUMBER	SHEET NO.
NH-30-5(131)	S61

C.N. 31983
STRUCTURE NUMBER S030 37773L

BRIDGE ENGINEER

PIER REINFORCING

LOCATION	▲	■	◪	◭
Pier No. 1 & 8	P1006	P1010	P1020	18-P606
Pier No. 2 & 7	P1007	P1011	P1014	20-P607
Pier No. 3 & 6	P1008	P1012	P1015	21-P608
Pier No. 4 & 5	P1009	P1013	P1016	22-P609

★ Space equally between adjacent P1001 bars.
✻ ◑ Typical at all girder seats.
▲ ■ ◪ Vertical wall reinforcing to match P1001.
Minimum clearance from surface of pile to reinforcing bar is 1".
(E.F.) = Each Face
(E.E.) = Each End

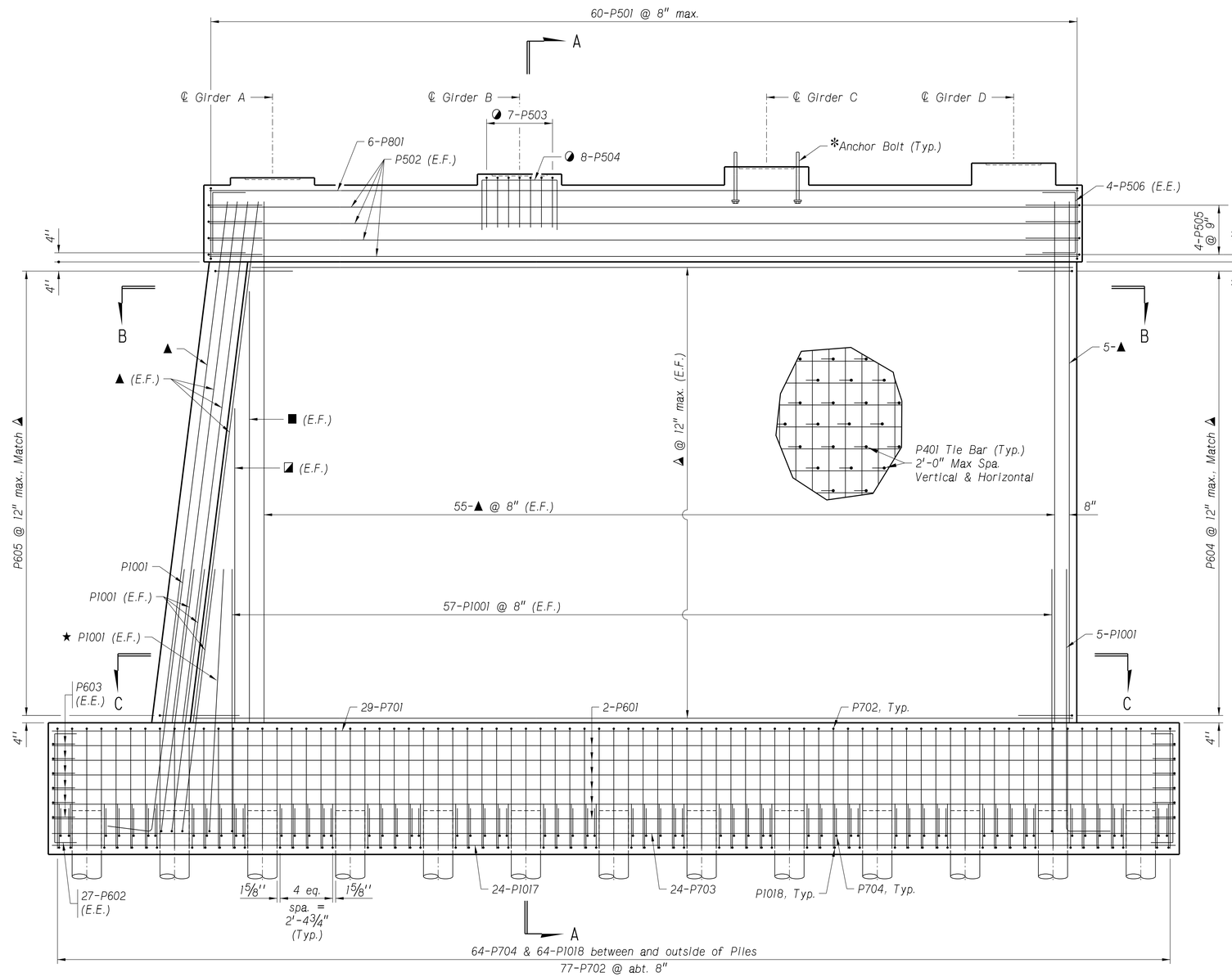

ELEVATION OF PIER REINFORCING

Pier 4 shown. Others similar. Facing North
Scale: 3/8" = 1'-0"

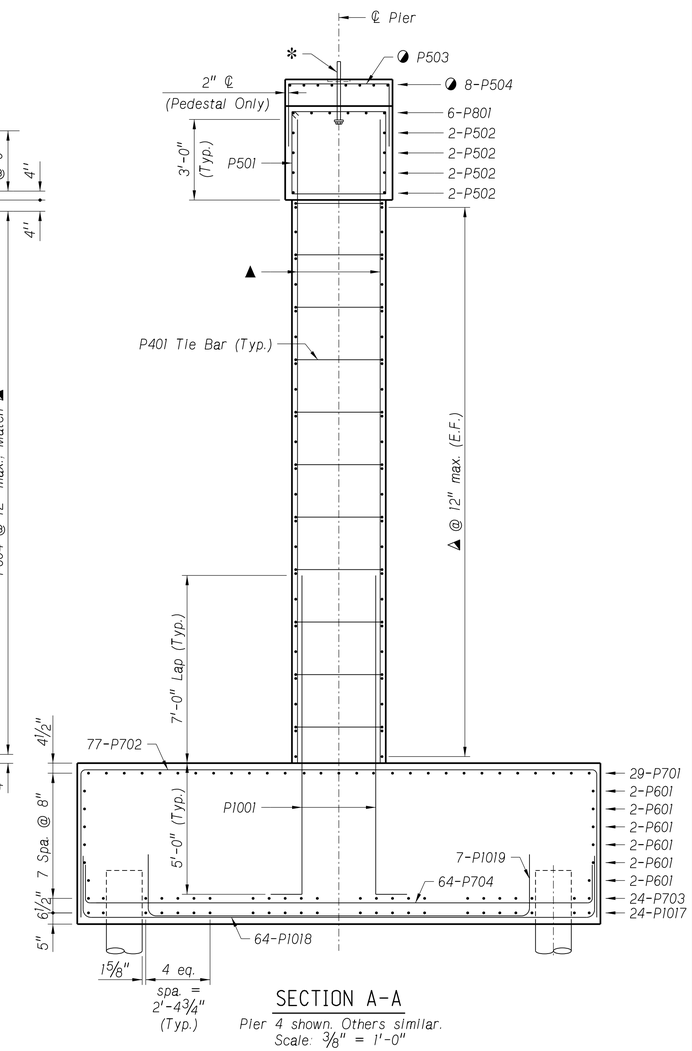

SECTION A-A

Pier 4 shown. Others similar.
Scale: 3/8" = 1'-0"

BURNS McDONNELL

1,289'-10" 9-SPAN
WELDED PLATE GIRDER BRIDGE
PIER REINFORCING DETAILS 1

COUNTY PLATTE
HWY. NO. US 30
REF. POST. 377.73L
STA. 409+22.09

LOCATION COLUMBUS SOUTH
SKEW 0°
ROADWAY 28'-0"
DESIGN LIVE LOAD HL-93

DESIGNED BY YZ
DETAILED BY NMF
CHECKED BY ASF
DATE JUL 2023

NEBRASKA DEPARTMENT OF TRANSPORTATION - BRIDGE DIVISION

NEBRASKA
Good Life. Great Journey.
DEPARTMENT OF TRANSPORTATION

SPECIAL PLAN NO. 2

BRIDGE DIVISION.
File: S030_37773L_CPG Computer: B720560 User: nmfischer Date: 07-JUL-2023 16:49

PRELIMINARY PLAN
NOT FINAL - SUBJECT TO CHANGE

PROJECT NUMBER	SHEET NO.
NH-30-5(131)	S62

C.N. 31983

STRUCTURE NUMBER
S030 37773L

BRIDGE ENGINEER

★ Space equally between adjacent P1001 bars.
◑ Typical at all girder seats.
▲ ■ ◪ Vertical wall reinforcing to match P1001.
▲ ■ ◪ ◭ See Sheet 19 of 42 for additional reinforcing details not shown.

(E.F.) = Each Face
(E.E.) = Each End

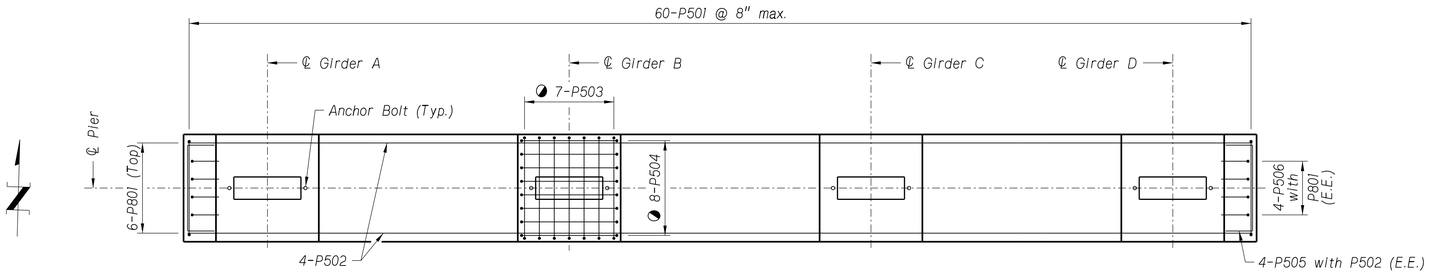

PLAN OF PIER CAP REINFORCING

Scale: 3/8" = 1'-0"

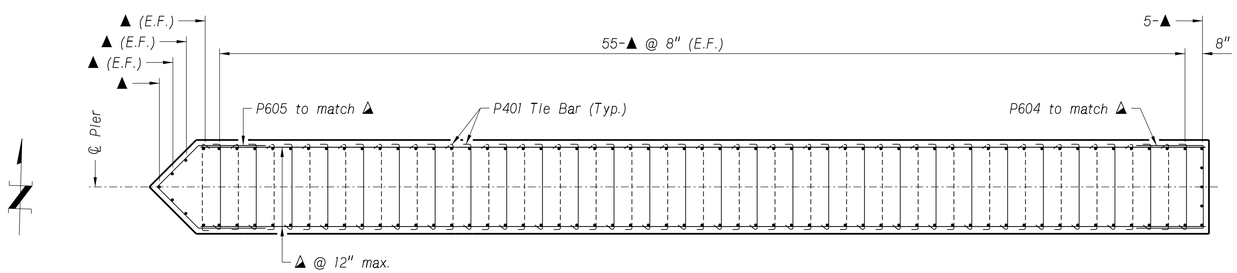

SECTION B-B

Scale: 3/8" = 1'-0"

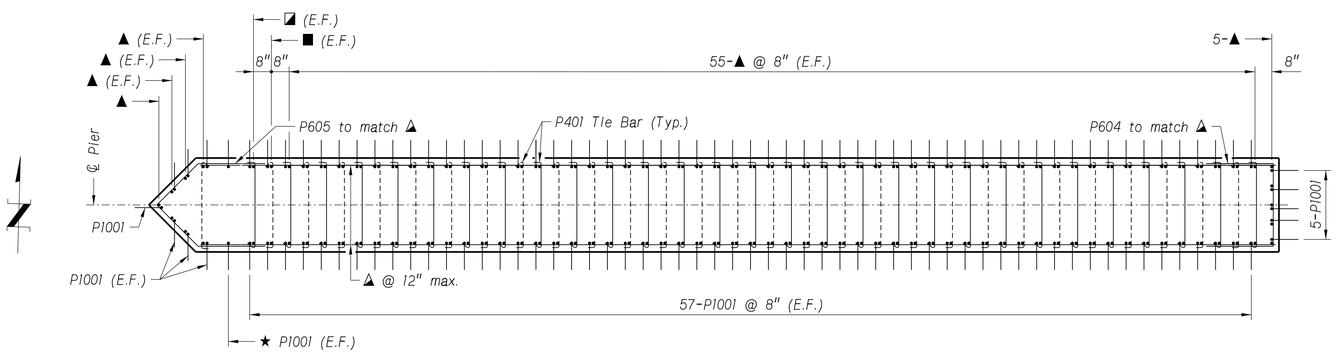

SECTION C-C

Scale: 3/8" = 1'-0"

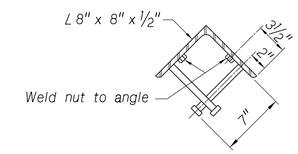

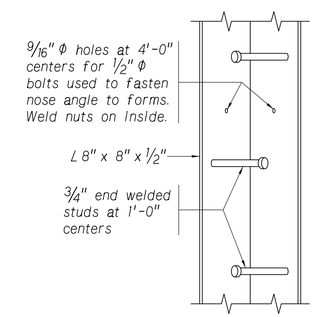

NOSE ARMOR ANGLE DETAILS

Upstream side only
Not to Scale

1,289'-10" 9-SPAN
WELDED PLATE GIRDER BRIDGE
PIER REINFORCING DETAILS 2

LOCATION COLUMBUS SOUTH
SKEW 0°
ROADWAY 28'-0"
DESIGN LIVE LOAD HL-93

DATE JUL 2023
CHECKED BY ASF
DETAILED BY NMF
DESIGNED BY YZ

COUNTY PLATTE
HWY. NO. US 30
REF. POST. 377.73L
STA. 409+22.09

NEBRASKA DEPARTMENT OF TRANSPORTATION - BRIDGE DIVISION

NEBRASKA
Good Life. Great Journey.
DEPARTMENT OF TRANSPORTATION

BURNS McDONNELL

SPECIAL PLAN NO. 2

BRIDGE DIVISION.
Computer: B720560
User: nmfischer
Date: 07-JUL-2023 13:14
File: S030_37773L_CPG

PRELIMINARY PLAN
NOT FINAL - SUBJECT TO CHANGE

PROJECT NUMBER	SHEET NO.
NH-30-5(131)	S63

C.N. 31983

STRUCTURE NUMBER
S030 37773L

BRIDGE ENGINEER

(E.E.) = Each End

Minimum clearance from surface of pile to reinforcing bar is 1".

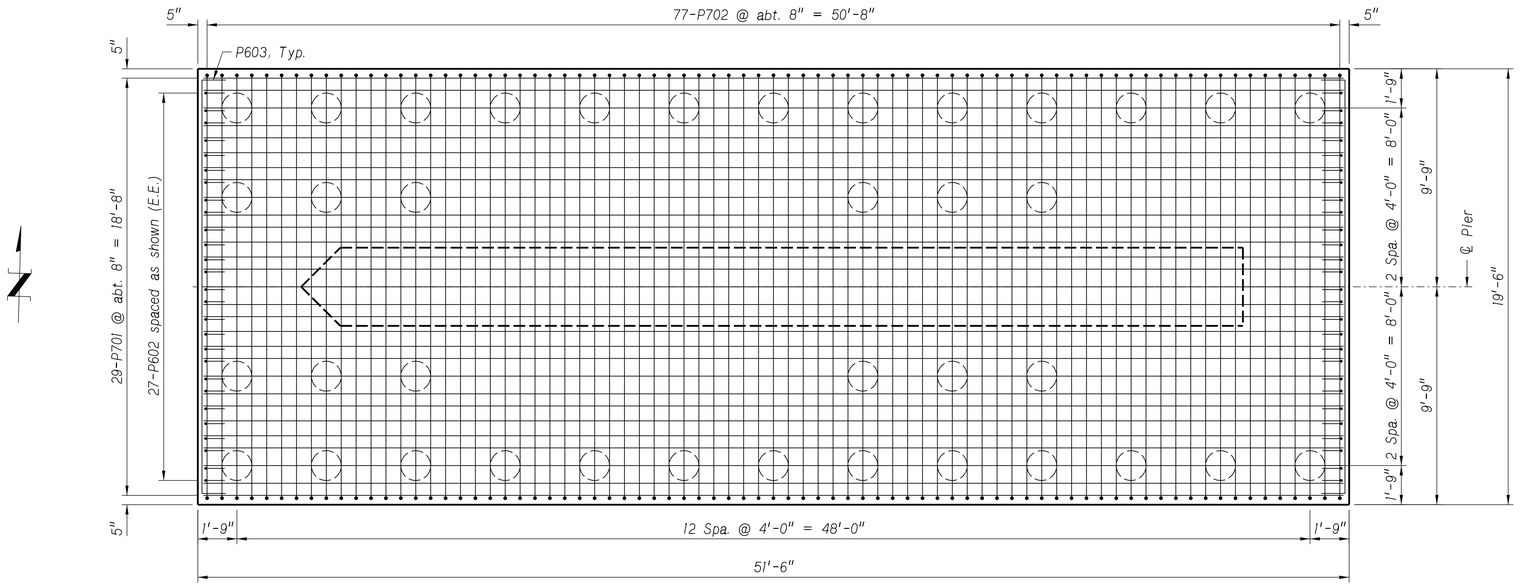

PLAN OF FOOTING - TOP REINFORCING

(Wall reinforcing not shown for clarity. See Sheets 19 & 20 for detail.)

Scale: 5/16" = 1'-0"

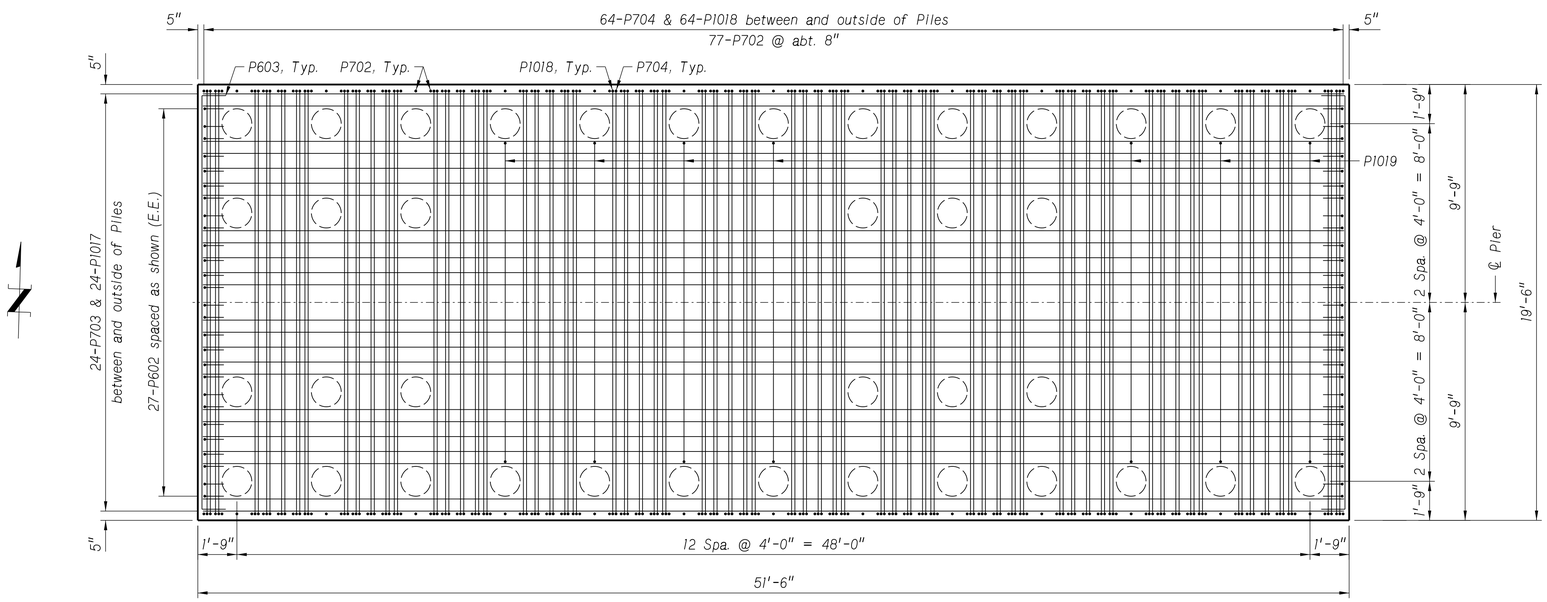

PLAN OF FOOTING - BOTTOM REINFORCING

Scale: 5/16" = 1'-0"

BURNS McDONNELL

1,289'-10" 9-SPAN
WELDED PLATE GIRDER BRIDGE
PIER REINFORCING DETAILS 3

LOCATION COLUMBUS SOUTH
SKEW 0°
ROADWAY 28'-0"
DESIGN LIVE LOAD HL-93

COUNTY PLATTE
HWY. NO. US 30
REF. POST. 377.73L
STA. 4091+22.09

DESIGNED BY YZ
DETAILED BY NMF
CHECKED BY ASF
DATE JUL 2023

NEBRASKA DEPARTMENT OF TRANSPORTATION - BRIDGE DIVISION

NEBRASKA
Good Life. Great Journey.
DEPARTMENT OF TRANSPORTATION

SPECIAL PLAN NO. 2

BRIDGE DIVISION.
Computer: B713227
User: asferdon
Date: 07-JUL-2023 18:22
File: S030_37773L_CPG

B I L L O F B A R S

PIER 1 (PIER 8 IS IDENTICAL)

MARK	NO.	LENGTH	TYPE	"A"	"B"	"C"	"D"	"E"	"F"	PIN	HOOK	WEIGHT LB
P1001	128	13'-11"	129	12'-0"						11"	1'-11"	7,665
P1006	122	20'-3"	STR									10,631
P1010	2	14'-2"	STR									122
P1017	24	51'-0"	STR									5,267
P1018	64	23'-0"	103	2'-0"	19'-0"	2'-0"				11"		6,334
P1019	7	18'-4"	103	2'-0"	14'-4"	2'-0"				11"		552
P1020	2	8'-10"	STR									76
P801	6	39'-6"	STR									633
P701	29	51'-0"	STR									3,023
P702	77	30'-0"	103	5'-6"	19'-0"	5'-6"				5¼"		4,722
P703	24	51'-0"	STR									2,502
P704	64	21'-6"	103	1'-3"	19'-0"	1'-3"				5¼"		2,813
P601	12	51'-0"	STR									919
P602	54	12'-8"	103	3'-8"	5'-4"	3'-8"				4½"		1,027
P603	12	26'-2"	103	3'-8"	18'-10"	3'-8"				4½"		472
P604	18	11'-6"	103	4'-3"	3'-0"	4'-3"				4½"		311
P605	18	12'-9"	122	4'-3"	2'-1½"	2'-1½"	1'-6"	1'-6"		4½"		345
P606	36	38'-4" AVG	STR									2,073
P501	60	13'-11"	107	3'-0"	3'-6"					2½"	5½"	871
P502	8	39'-6"	STR									330
P503	28	10'-2"	103	3'-3"	3'-8"	3'-3"				2½"		297
P504	32	10'-0"	103	3'-3"	3'-6"	3'-3"				2½"		334
P505	8	8'-11"	103	2'-9"	3'-4¾"	2'-9"				2½"		74
P506	8	8'-5"	103	2'-9"	2'-10¾"	2'-9"				2½"		70
P401	518	3'-9"	113		3'-0"					2"	4½"	1,298

SUBTOTAL (PIER 1)= 52,761 LB

SUBTOTAL (PIER 8)= 52,761 LB

PIER 3 (PIER 6 IS IDENTICAL)

MARK	NO.	LENGTH	TYPE	"A"	"B"	"C"	"D"	"E"	"F"	PIN	HOOK	WEIGHT LB
P1001	128	13'-11"	129	12'-0"						11"	1'-11"	7,665
P1008	122	23'-3"	STR									12,205
P1012	2	17'-2"	STR									148
P1015	2	11'-10"	STR									102
P1017	24	51'-0"	STR									5,267
P1018	64	23'-0"	103	2'-0"	19'-0"	2'-0"				11"		6,334
P1019	7	18'-4"	103	2'-0"	14'-4"	2'-0"				11"		552
P801	6	39'-6"	STR									633
P701	29	51'-0"	STR									3,023
P702	77	30'-0"	103	5'-6"	19'-0"	5'-6"				5¼"		4,722
P703	24	51'-0"	STR									2,502
P704	64	21'-6"	103	1'-3"	19'-0"	1'-3"				5¼"		2,813
P601	12	51'-0"	STR									919
P602	54	12'-8"	103	3'-8"	5'-4"	3'-8"				4½"		1,027
P603	12	26'-2"	103	3'-8"	18'-10"	3'-8"				4½"		472
P604	21	11'-6"	103	4'-3"	3'-0"	4'-3"				4½"		363
P605	21	12'-9"	122	4'-3"	2'-1½"	2'-1½"	1'-6"	1'-6"		4½"		402
P608	42	38'-6" AVG	STR									2,429
P501	60	13'-11"	107	3'-0"	3'-6"					2½"	5½"	871
P502	8	39'-6"	STR									330
P503	28	10'-2"	103	3'-3"	3'-8"	3'-3"				2½"		297
P504	32	10'-0"	103	3'-3"	3'-6"	3'-3"				2½"		334
P505	8	8'-11"	103	2'-9"	3'-4¾"	2'-9"				2½"		74
P506	8	8'-5"	103	2'-9"	2'-10¾"	2'-9"				2½"		70
P401	607	3'-9"	113		3'-0"					2"	4½"	1,521

SUBTOTAL (PIER 3)= 55,075 LB

SUBTOTAL (PIER 6)= 55,075 LB

PIER 2 (PIER 7 IS IDENTICAL)

MARK	NO.	LENGTH	TYPE	"A"	"B"	"C"	"D"	"E"	"F"	PIN	HOOK	WEIGHT LB
P1001	128	13'-11"	129	12'-0"						11"	1'-11"	7,665
P1007	122	22'-2"	STR									11,637
P1011	2	16'-1"	STR									138
P1014	2	10'-9"	STR									93
P1017	24	51'-0"	STR									5,267
P1018	64	23'-0"	103	2'-0"	19'-0"	2'-0"				11"		6,334
P1019	7	18'-4"	103	2'-0"	14'-4"	2'-0"				11"		552
P801	6	39'-6"	STR									633
P701	29	51'-0"	STR									3,023
P702	77	30'-0"	103	5'-6"	19'-0"	5'-6"				5¼"		4,722
P703	24	51'-0"	STR									2,502
P704	64	21'-6"	103	1'-3"	19'-0"	1'-3"				5¼"		2,813
P601	12	51'-0"	STR									919
P602	54	12'-8"	103	3'-8"	5'-4"	3'-8"				4½"		1,027
P603	12	26'-2"	103	3'-8"	18'-10"	3'-8"				4½"		472
P604	20	11'-6"	103	4'-3"	3'-0"	4'-3"				4½"		345
P605	20	12'-9"	122	4'-3"	2'-1½"	2'-1½"	1'-6"	1'-6"		4½"		383
P607	40	38'-5" AVG	STR									2,308
P501	60	13'-11"	107	3'-0"	3'-6"					2½"	5½"	871
P502	8	39'-6"	STR									330
P503	28	10'-2"	103	3'-3"	3'-8"	3'-3"				2½"		297
P504	32	10'-0"	103	3'-3"	3'-6"	3'-3"				2½"		334
P505	8	8'-11"	103	2'-9"	3'-4¾"	2'-9"				2½"		74
P506	8	8'-5"	103	2'-9"	2'-10¾"	2'-9"				2½"		70
P401	576	3'-9"	113		3'-0"					2"	4½"	1,443

SUBTOTAL (PIER 2)= 54,252 LB

SUBTOTAL (PIER 7)= 54,252 LB

PIER 4 (PIER 5 IS IDENTICAL)

MARK	NO.	LENGTH	TYPE	"A"	"B"	"C"	"D"	"E"	"F"	PIN	HOOK	WEIGHT LB
P1001	128	13'-11"	129	12'-0"						11"	1'-11"	7,665
P1009	122	24'-0"	STR									12,599
P1013	2	17'-11"	STR									154
P1016	2	12'-7"	STR									108
P1017	24	51'-0"	STR									5,267
P1018	64	23'-0"	103	2'-0"	19'-0"	2'-0"				11"		6,334
P1019	7	18'-4"	103	2'-0"	14'-4"	2'-0"				11"		552
P801	6	39'-6"	STR									633
P701	29	51'-0"	STR									3,023
P702	77	30'-0"	103	5'-6"	19'-0"	5'-6"				5¼"		4,722
P703	24	51'-0"	STR									2,502
P704	64	21'-6"	103	1'-3"	19'-0"	1'-3"				5¼"		2,813
P601	12	51'-0"	STR									919
P602	54	12'-8"	103	3'-8"	5'-4"	3'-8"				4½"		1,027
P603	12	26'-2"	103	3'-8"	18'-10"	3'-8"				4½"		472
P604	22	11'-6"	103	4'-3"	3'-0"	4'-3"				4½"		380
P605	22	12'-9"	122	4'-3"	2'-1½"	2'-1½"	1'-6"	1'-6"		4½"		421
P609	44	38'-7" AVG	STR									2,550
P501	60	13'-11"	107	3'-0"	3'-6"					2½"	5½"	871
P502	8	39'-6"	STR									330
P503	28	10'-2"	103	3'-3"	3'-8"	3'-3"				2½"		297
P504	32	10'-0"	103	3'-3"	3'-6"	3'-3"				2½"		334
P505	8	8'-11"	103	2'-9"	3'-4¾"	2'-9"				2½"		74
P506	8	8'-5"	103	2'-9"	2'-10¾"	2'-9"				2½"		70
P401	635	3'-9"	113		3'-0"					2"	4½"	1,591

SUBTOTAL (PIER 4)= 55,708 LB

SUBTOTAL (PIER 5)= 55,708 LB

TOTAL (PIER 1-8)= 435,592 LB

NOTE: FOR BENDING DIAGRAMS, HOOK LENGTHS, & PIN DIAMETERS, SEE SHEET 42 OF 42.

BAR SETS

MARK	MAX. LENGTH	MIN. LENGTH	NO. OF SETS	BARS PER SET
P606	39'-5"	37'-3"	2	18
P607	39'-7"	37'-3"	2	20
P608	39'-9"	37'-3"	2	21
P609	39'-11"	37'-3"	2	22

PRELIMINARY PLAN
NOT FINAL - SUBJECT TO CHANGE

BURNS McDONNELL

PROJECT NUMBER	SHEET NO.
NH-30-5(131)	S64

C.N. 31983

STRUCTURE NUMBER
S030 37773L

BRIDGE ENGINEER

1,289'-10" 9-SPAN
WELDED PLATE GIRDER BRIDGE
PIER DETAILS & BILL OF BARS

DATE JUL 2023

CHECKED BY ASF

DETAILED BY NMF

DESIGN LIVE LOAD HL-93

ROADWAY 28'-0"

SKEW 0°

LOCATION COLUMBUS SOUTH

COUNTY PLATTE

HWY. NO. US 30

REF. POST. 377.73L

STA. 409+22.09

DESIGNED BY YZ

NEBRASKA DEPARTMENT OF TRANSPORTATION - BRIDGE DIVISION

NEBRASKA
Good Life. Great Journey.
DEPARTMENT OF TRANSPORTATION

SPECIAL PLAN NO. 2

22 / 42

BRIDGE DIVISION.

Computer: B720560

User: nmfischer

Date: 07-JUL-2023 13:14

File: S030_37773L_CPG

PRELIMINARY PLAN
NOT FINAL - SUBJECT TO CHANGE

PROJECT NUMBER	SHEET NO.
NH-30-5(131)	S65

C.N. 31983
STRUCTURE NUMBER S030 37773L

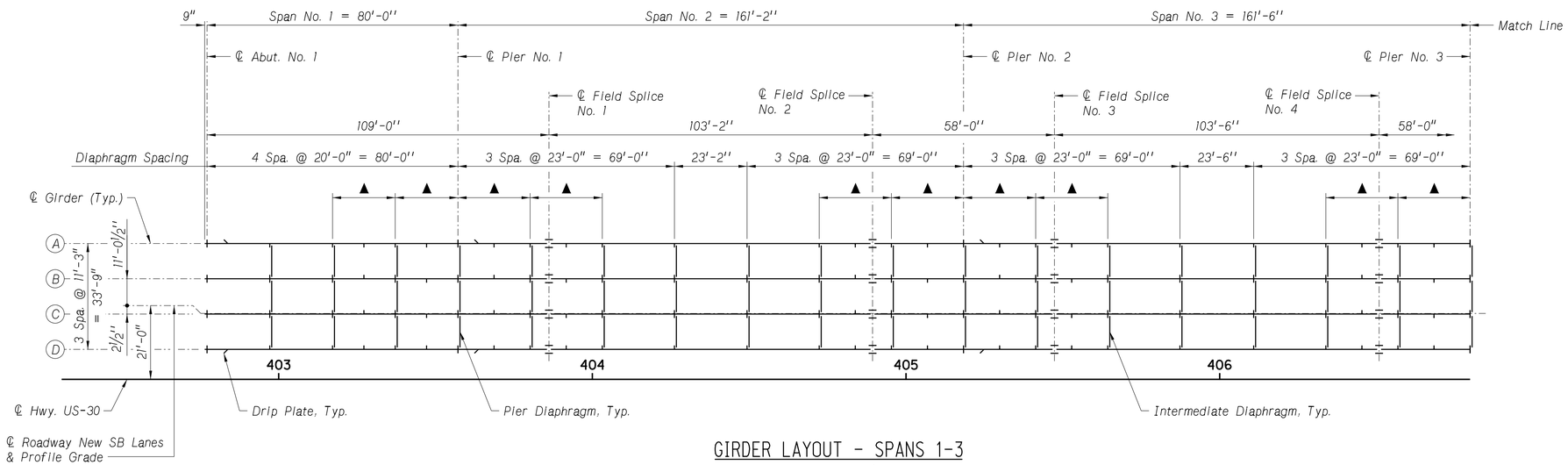

▲ 2 Equal Spaces, Typ.

GIRDER LAYOUT - SPANS 1-3

Scale: 1" = 20'-0"

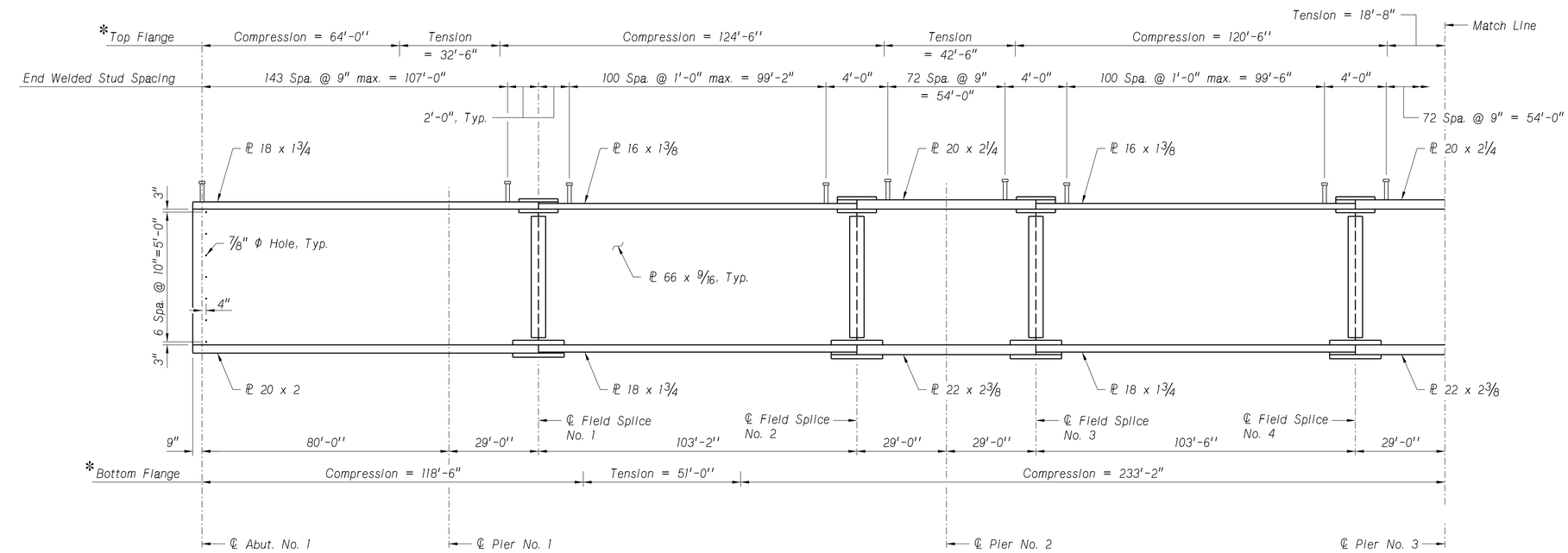

GIRDER ELEVATION - SPANS 1-3

Scale: 1" = 20'-0"

NOTES:

Intermediate stiffener plates shall alternate on both sides of the web, at intervals shown, for interior girders. At exterior girders, intermediate stiffeners shall be placed only on the inside of the web plate.

* Top Flange and Bottom Flange tension and compression labels are to be used solely for determination of intermediate stiffener connection details. Flange regions labeled "compression" may also experience tension.

As an alternate design, all intermediate stiffener plates may be omitted if the 9/16" web plates are replaced by:
1) 11/16" plates for the pier segments, and
2) 5/8" plates for the end span and midspan segments.

CHARPY IMPACT TEST REQUIREMENTS FOR MAIN TENSION MEMBERS
For the purpose of impact test the following material shall be classified as main tension members: All flange plates All web plates All field splice plates

BURNS McDONNELL

BRIDGE ENGINEER

1,289'-10" 9-SPAN
WELDED PLATE GIRDER BRIDGE
GIRDER LAYOUT AND ELEVATION 1

LOCATION COLUMBUS SOUTH
SKEW 0°
ROADWAY 28'-0"
DESIGN LIVE LOAD HL-93
DATE JUL 2023
CHECKED BY SDH
DETAILED BY TWM
DESIGNED BY YZ

COUNTY PLATTE
HWY. NO. US 30
REF. POST. 377.73L
STA. 409+22.09

NEBRASKA DEPARTMENT OF TRANSPORTATION - BRIDGE DIVISION

NEBRASKA
Good Life. Great Journey.
DEPARTMENT OF TRANSPORTATION

SPECIAL PLAN NO. 2

BRIDGE DIVISION.
Computer: B720560
User: nmfischer
Date: 07-JUL-2023 16:49
File: S030_37773L_CPG

PRELIMINARY PLAN
NOT FINAL - SUBJECT TO CHANGE

PROJECT NUMBER	SHEET NO.
NH-30-5(131)	S66

C.N. 31983
STRUCTURE NUMBER S030 37773L

BRIDGE ENGINEER

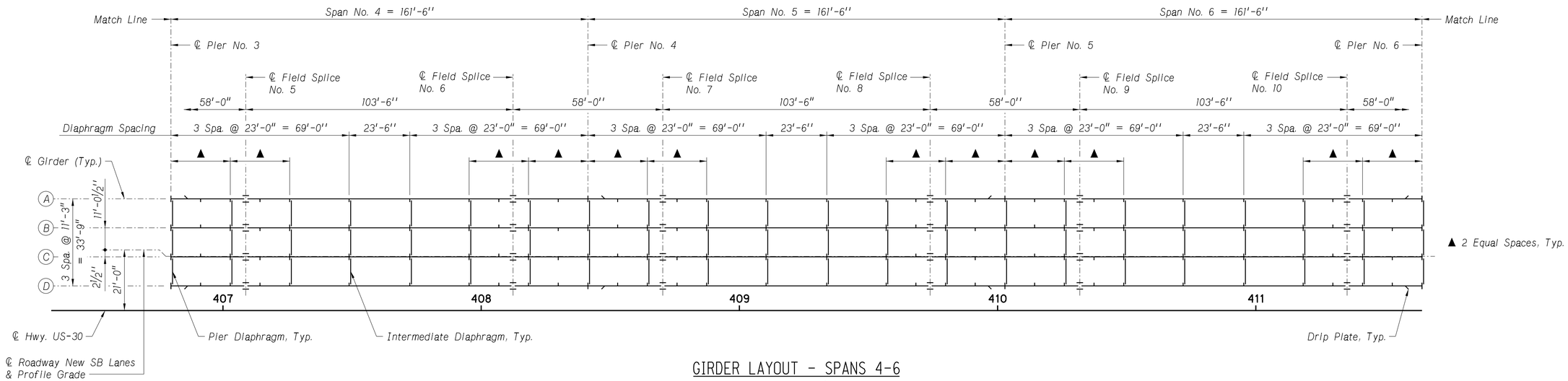

GIRDER LAYOUT - SPANS 4-6

Scale: 1" = 20'-0"

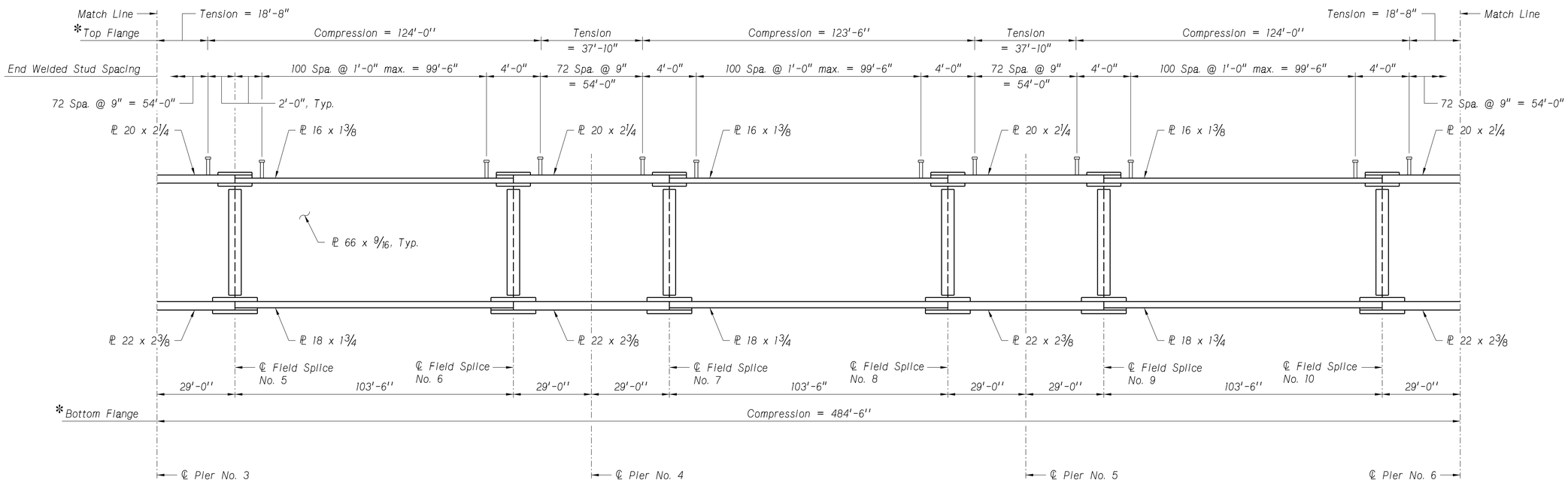

GIRDER ELEVATION - SPANS 4-6

Scale: 1" = 20'-0"

*Top Flange and Bottom Flange tension and compression labels are to be used solely for determination of intermediate stiffener connection details. Flange regions labeled "compression" may also experience tension.

BURNS McDONNELL

1,289'-10" 9-SPAN
WELDED PLATE GIRDER BRIDGE
GIRDER LAYOUT AND ELEVATION 2

LOCATION COLUMBUS SOUTH
SKEW 0°
ROADWAY 28'-0"
DESIGN LIVE LOAD HL-93
DETAILED BY TWM
CHECKED BY
DATE JUL 2023
COUNTY PLATTE
HWY. NO. US 30
REF. POST. 377.73L
STA. 409+22.09
DESIGNED BY YZ

NEBRASKA DEPARTMENT OF TRANSPORTATION - BRIDGE DIVISION

NEBRASKA
Good Life. Great Journey.
DEPARTMENT OF TRANSPORTATION

SPECIAL PLAN NO.	
2	24/42

BRIDGE DIVISION.
Computer: B720560
User: nmfischer
Date: 07-JUL-2023 13:15
File: S030_37773L_CPG

PRELIMINARY PLAN
NOT FINAL - SUBJECT TO CHANGE

PROJECT NUMBER	SHEET NO.
NH-30-5(131)	S67

C.N. 31983
STRUCTURE NUMBER S030 37773L

BRIDGE ENGINEER

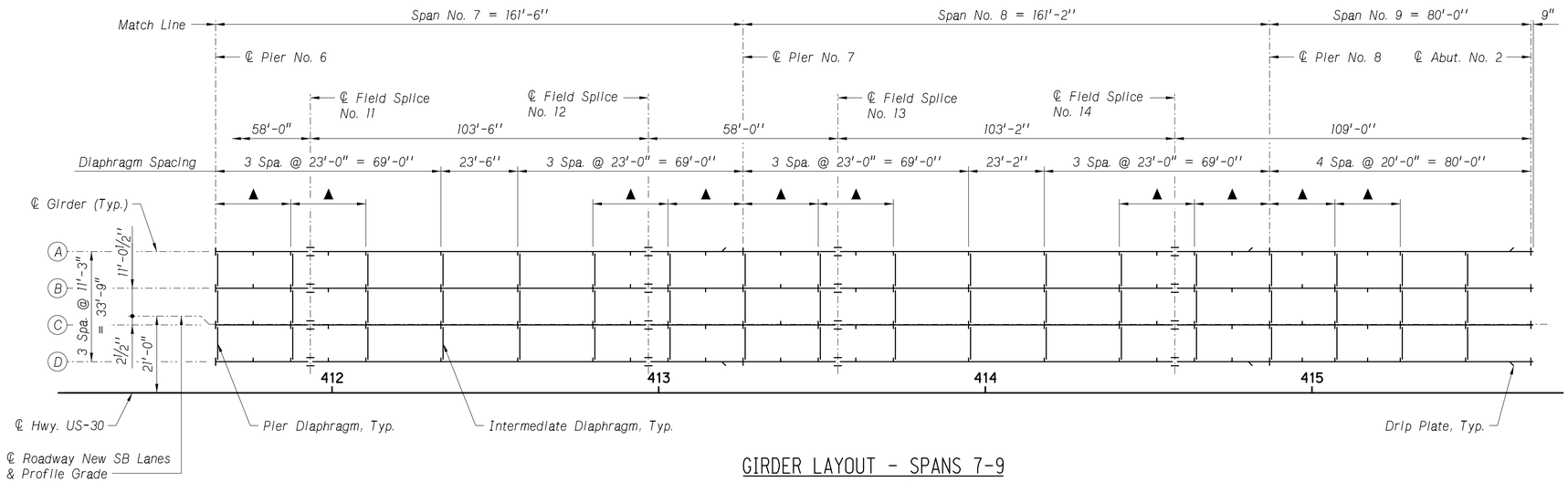

▲ 2 Equal Spaces, Typ.

GIRDER LAYOUT - SPANS 7-9

Scale: 1" = 20'-0"

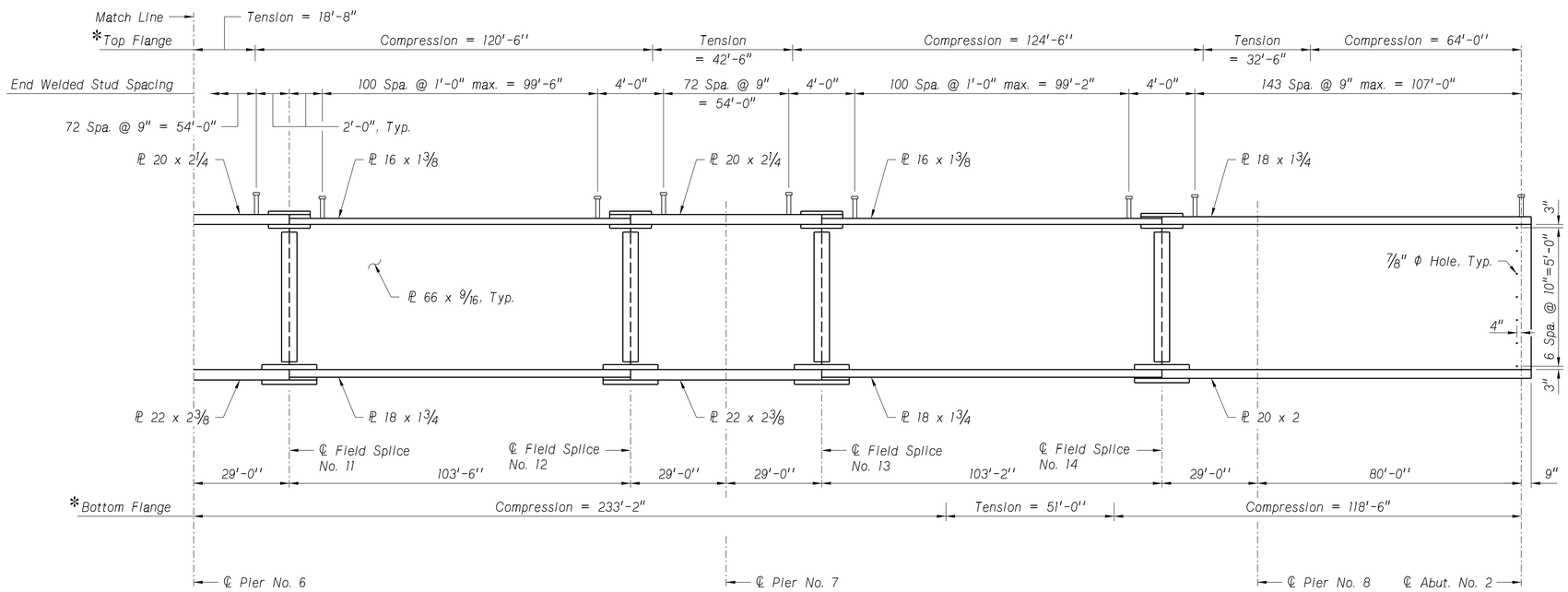

GIRDER ELEVATION - SPANS 7-9

Scale: 1" = 20'-0"

*Top Flange and Bottom Flange tension and compression labels are to be used solely for determination of intermediate stiffener connection details. Flange regions labeled "compression" may also experience tension.

BURNS McDONNELL

1,289'-10" 9-SPAN
WELDED PLATE GIRDER BRIDGE
GIRDER LAYOUT AND ELEVATION 3

COUNTY PLATTE
HWY. NO. US 30
REF. POST. 377.73L
STA. 409+22.09

LOCATION COLUMBUS SOUTH
SKEW 0°
ROADWAY 28'-0"
DESIGN LIVE LOAD HL-93

DESIGNED BY YZ
DETAILED BY TWM
CHECKED BY SDH
DATE JUL 2023

NEBRASKA DEPARTMENT OF TRANSPORTATION - BRIDGE DIVISION

NEBRASKA
Good Life. Great Journey.
DEPARTMENT OF TRANSPORTATION

SPECIAL PLAN NO. 2

BRIDGE DIVISION.
Computer: B720560
User: nmfischer
Date: 07-JUL-2023 16:50
File: S030_37773L_CPG

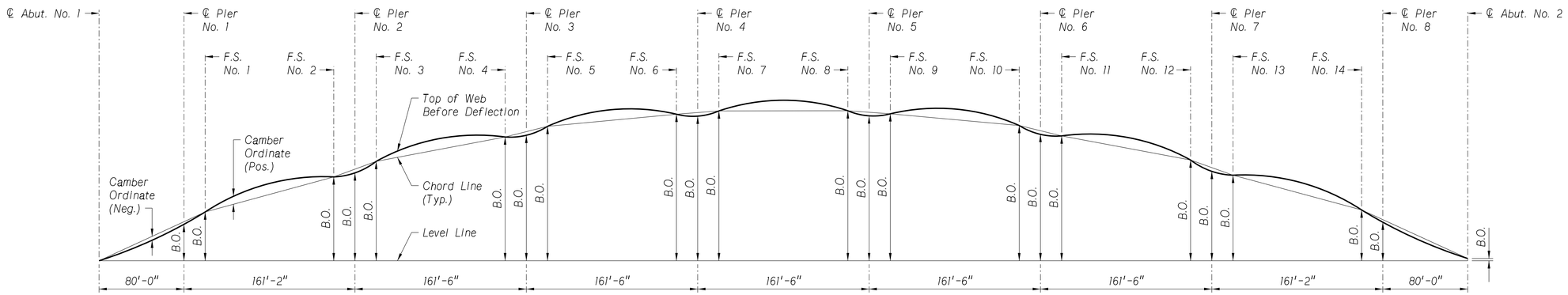

CAMBER AND BLOCKING DIAGRAM

Not to Scale

DEAD LOAD DEFLECTION, CAMBER AND BLOCKING ORDINATES

TENTH POINT	DEAD LOAD DEFLECTION FOR SHIMS (IN.)	CAMBER ORDINATE (IN.)	BLOCKING ORDINATE (IN.)	TENTH POINT	DEAD LOAD DEFLECTION FOR SHIMS (IN.)	CAMBER ORDINATE (IN.)	BLOCKING ORDINATE (IN.)	TENTH POINT	DEAD LOAD DEFLECTION FOR SHIMS (IN.)	CAMBER ORDINATE (IN.)	BLOCKING ORDINATE (IN.)	TENTH POINT	DEAD LOAD DEFLECTION FOR SHIMS (IN.)	CAMBER ORDINATE (IN.)	BLOCKING ORDINATE (IN.)	TENTH POINT	DEAD LOAD DEFLECTION FOR SHIMS (IN.)	CAMBER ORDINATE (IN.)	BLOCKING ORDINATE (IN.)
1.0	0.00	0.00	0.00	3.1	0.07	-0.37	-	5.1	0.17	-0.33	-	7.1	0.14	-0.31	-	9.1	-0.14	-0.77	-
1.1	-0.01	-0.07	-	F.S. #3	0.33	0.00	42.16	F.S. #7	0.50	0.00	63.57	F.S. #11	0.43	0.00	52.97	9.2	-0.21	-0.73	-
1.2	-0.03	-0.15	-	3.2	0.41	0.14	-	5.2	0.59	0.16	-	7.2	0.51	0.15	-	9.3	-0.21	-0.65	-
1.3	-0.06	-0.25	-	3.3	0.85	0.87	-	5.3	1.07	0.95	-	7.3	0.95	0.91	-	9.4	-0.19	-0.54	-
1.4	-0.10	-0.35	-	3.4	1.22	1.42	-	5.4	1.44	1.53	-	7.4	1.27	1.45	-	9.5	-0.15	-0.43	-
1.5	-0.15	-0.47	-	3.5	1.38	1.63	-	5.5	1.58	1.74	-	7.5	1.38	1.63	-	9.6	-0.10	-0.32	-
1.6	-0.19	-0.58	-	3.6	1.27	1.45	-	5.6	1.44	1.53	-	7.6	1.22	1.42	-	9.7	-0.06	-0.22	-
1.7	-0.21	-0.68	-	3.7	0.95	0.91	-	5.7	1.07	0.95	-	7.7	0.85	0.87	-	9.8	-0.03	-0.14	-
1.8	-0.21	-0.76	-	3.8	0.51	0.15	-	5.8	0.59	0.16	-	7.8	0.41	0.14	-	9.9	-0.01	-0.06	-
1.9	-0.14	-0.80	-	F.S. #4	0.43	0.00	52.52	F.S. #8	0.50	0.00	63.64	F.S. #12	0.33	0.00	42.76	10.0	0.00	0.00	0.97
2.0	0.00	-0.75	14.43	3.9	0.14	-0.31	-	5.9	0.17	-0.33	-	7.9	0.07	-0.37	-				
2.1	0.55	-0.40	-	4.0	0.00	-0.50	54.28	6.0	0.00	-0.53	62.47	8.0	0.00	-0.58	38.94				
F.S. #1	1.13	0.00	20.69	4.1	0.23	-0.31	-	6.1	0.21	-0.33	-	8.1	0.35	-0.37	-				
2.2	1.27	0.23	-	F.S. #5	0.59	0.00	57.04	F.S. #9	0.56	0.00	62.35	F.S. #13	0.83	0.00	36.29				
2.3	1.93	1.30	-	4.2	0.69	0.17	-	6.2	0.66	0.17	-	8.2	0.95	0.19	-				
2.4	2.36	2.00	-	4.3	1.20	1.00	-	6.3	1.17	0.99	-	8.3	1.63	1.16	-				
2.5	2.44	2.20	-	4.4	1.59	1.60	-	6.4	1.57	1.59	-	8.4	2.17	1.89	-				
2.6	2.17	1.89	-	4.5	1.72	1.82	-	6.5	1.72	1.82	-	8.5	2.44	2.20	-				
2.7	1.63	1.16	-	4.6	1.57	1.59	-	6.6	1.59	1.60	-	8.6	2.35	2.00	-				
2.8	0.95	0.19	-	4.7	1.17	0.99	-	6.7	1.20	1.00	-	8.7	1.93	1.30	-				
F.S. #2	0.83	0.00	35.59	4.8	0.66	0.17	-	6.8	0.69	0.17	-	8.8	1.27	0.23	-				
2.9	0.35	-0.37	-	F.S. #6	0.56	0.00	62.16	F.S. #10	0.59	0.00	57.38	F.S. #14	1.13	0.00	21.56				
3.0	0.00	-0.58	38.29	4.9	0.21	-0.33	-	6.9	0.23	-0.31	-	8.9	0.55	-0.39	-				
				5.0	0.00	-0.53	62.34	7.0	0.00	-0.50	54.67	9.0	0.00	-0.74	15.34				

BURNS McDONNELL

BRIDGE ENGINEER

1,289'-10" 9-SPAN
WELDED PLATE GIRDER BRIDGE
CAMBER AND BLOCKING DETAILS

DATE JUL 2023

LOCATION COLUMBUS SOUTH
SKEW 0°
ROADWAY 28'-0"
DESIGN LIVE LOAD HL-93

COUNTY PLATTE
HWY. NO. US 30
REF. POST. 377.73L
STA. 409+22.09

DETAILED BY TWM
CHECKED BY SDH
DESIGNED BY YZ

NEBRASKA DEPARTMENT OF TRANSPORTATION - BRIDGE DIVISION

NEBRASKA
Good Life. Great Journey.
DEPARTMENT OF TRANSPORTATION

SPECIAL PLAN NO. 2

BRIDGE DIVISION.
File: S030_37773L_CPG Computer: B720560
Date: 07-JUL-2023 13:16 User: nmfischer

PRELIMINARY PLAN
NOT FINAL - SUBJECT TO CHANGE

PROJECT NUMBER	SHEET NO.
NH-30-5(131)	S69

C.N. 31983
STRUCTURE NUMBER S030 37773L
BRIDGE ENGINEER

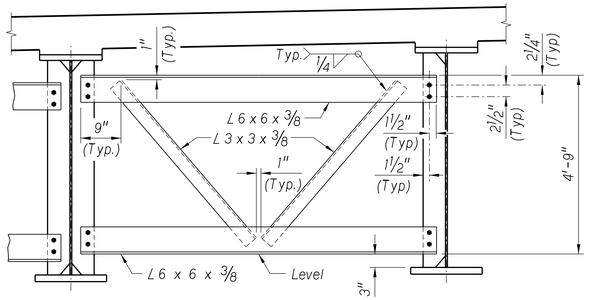

INTERMEDIATE DIAPHRAGM

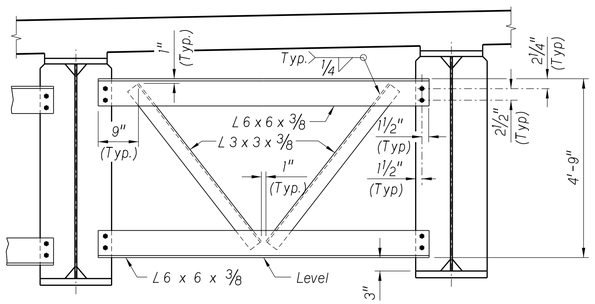

PIER DIAPHRAGM

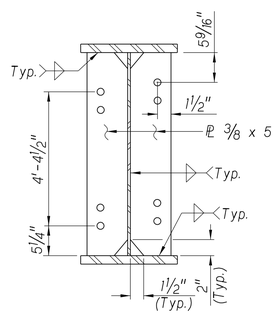

STIFFENER PLATES AT INTERMEDIATE DIAPHRAGMS

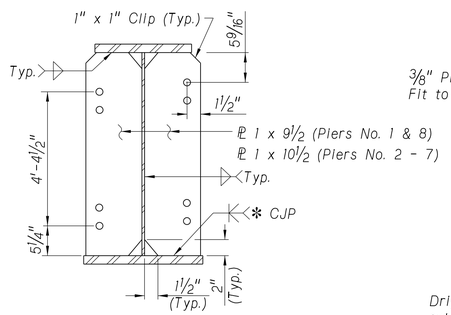

BEARING STIFFENERS AT PIERS

* As an alternate: Grind to Bear with a 5/16" Fillet Weld on each face

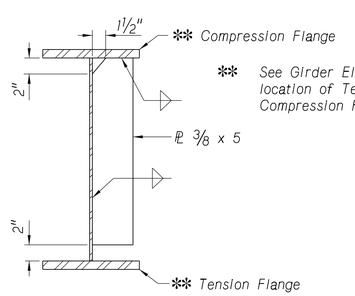

** See Girder Elevation for location of Tension and Compression Flanges.

INTERMEDIATE STIFFENERS

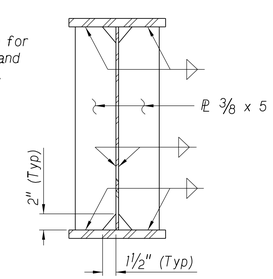

ANCHORAGE STIFFENERS AT ABUTMENTS

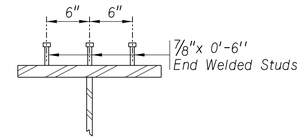

SHEAR CONNECTOR DETAIL

When Shear Connectors (Studs) are field applied, the following notes shall apply:

The Bridge Office shall be notified a minimum of one week prior to the application of the field welded studs.

Stud welding shall be accomplished in accordance with the AWS D1.5 Standard Specifications, Section 7.

All stud welding shall be done by a certified stud welder. At the time of stud welding, the studs and base metal shall be free from rust, rust pits, scale, oil, moisture, falling rain or snow, and any other foreign material. Areas must be wire brushed or cleaned by grinding before any welding can occur.

Any studs that do not exhibit a 360° collar must be repaired by a SMAW fillet weld (E8018-C3 Electrode) and the repair shall extend 3/8" beyond each end of the missing collar.

Mill Certification for the studs shall be submitted to the Engineer.

FIELD SPLICE DATA
Field Splices No. 1 & 14

	Thickness	Width	Length
Plate A	5/16"	1'-1"	4'-10"
Plate B	3/4"	1'-4"	3'-1"
Plate C	7/8"	7"	3'-1"
Plate D	1 1/8"	8"	4'-1"
Plate E	1"	1'-6"	4'-1"
Top Fill Plate	3/8"	1'-4"	1'-6"
Bot. Fill Plate	1/4"	1'-6"	2'-0"

No. of Bolt Spaces				Bolt Spacing					
H	J	K	N	P	F	G	S	T	V
5	7	1	11	5"	3"	3"	1 1/2"	3"	4"

FIELD SPLICE DATA
Field Splices No. 2 - 13

	Thickness	Width	Length
Plate A	5/16"	1'-1"	4'-10"
Plate B	3/4"	1'-4"	3'-1"
Plate C	7/8"	7"	3'-1"
Plate D	1 1/8"	8"	4'-1"
Plate E	1"	1'-6"	4'-1"
Top Fill Plate	7/8"	1'-4"	1'-6"
Bot. Fill Plate	5/8"	1'-6"	2'-0"

No. of Bolt Spaces				Bolt Spacing					
H	J	K	N	P	F	G	S	T	V
5	7	1	11	5"	3"	3"	1 1/2"	3"	4"

▲ Stop weld 1/2" from end of drip plate and from edge of girder. Fill with 100 % silicone sealant as manufactured by GE, DAP, Dow Corning, DuPont or Titebond as shown.

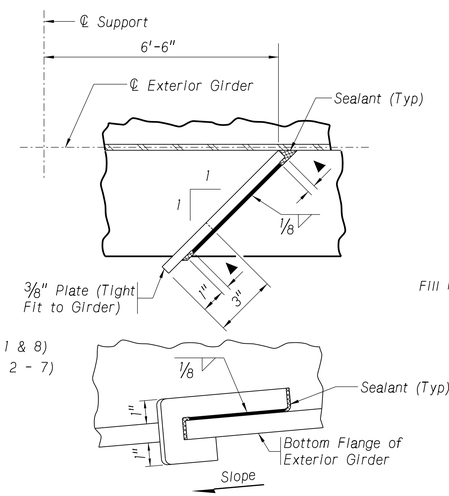

Drip plates will be placed on the outside of the exterior girders on the up grade side of all supports.

TYPICAL DRIP PLATE DETAIL FOR EXTERIOR GIRDERS

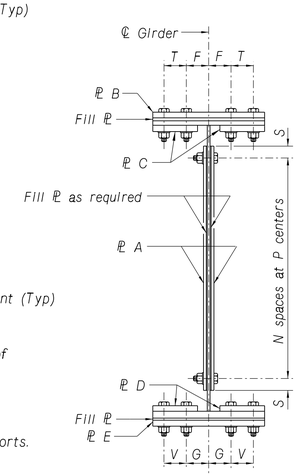

SECTION

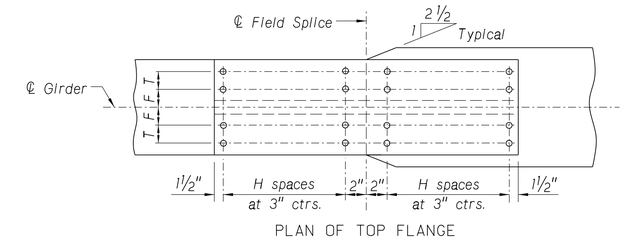

PLAN OF TOP FLANGE

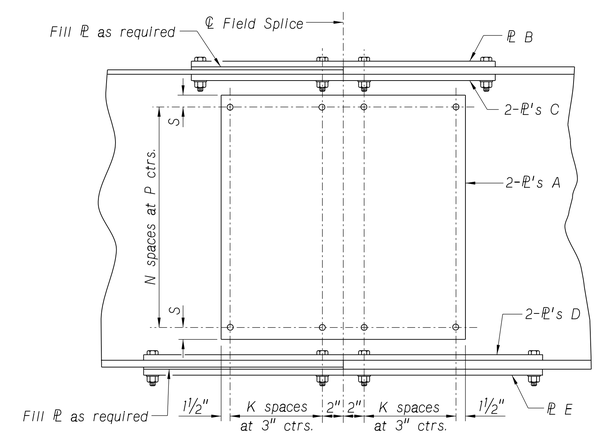

ELEVATION

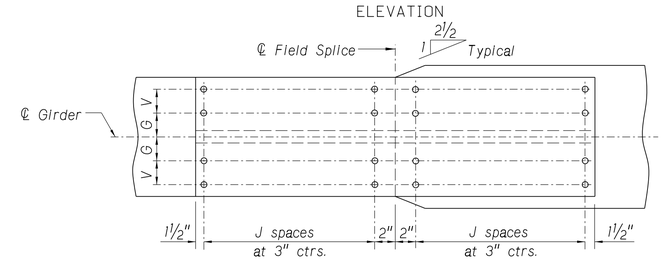

PLAN OF BOTTOM FLANGE

FIELD SPLICE DETAILS

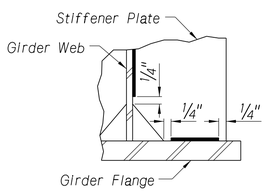

TYPICAL STIFFENER WELD DETAIL

NOTES:

All details on the sheet are Not to Scale.

Web and flange bolt threads shall be excluded from the shear planes at all field splices.

BURNS McDONNELL

1,289'-10" 9-SPAN
WELDED PLATE GIRDER BRIDGE
GIRDER DETAILS

DATE JUL 2023
CHECKED BY SDH
DETAILED BY TWM
DESIGNED BY YZ

LOCATION COLUMBUS SOUTH
SKEW 0°
ROADWAY 28'-0"
DESIGN LIVE LOAD HL-93

COUNTY PLATTE
HWY. NO. US 30
REF. POST. 377.73L
STA. 409+22.09

NEBRASKA DEPARTMENT OF TRANSPORTATION - BRIDGE DIVISION

NEBRASKA
Good Life. Great Journey.
DEPARTMENT OF TRANSPORTATION

SPECIAL PLAN NO. 2

BRIDGE DIVISION.
Computer: B720560
User: nmfischer
Date: 07-JUL-2023 13:16
File: S030_37773L_CPG

PRELIMINARY PLAN
NOT FINAL - SUBJECT TO CHANGE

PROJECT NUMBER	SHEET NO.
NH-30-5(131)	S70

C.N. 31983
STRUCTURE NUMBER S030 37773L

BRIDGE ENGINEER

DIMENSIONS FOR BEARING DEVICES

LOCATION	SOLE PLATE					STAINLESS STEEL		COTTON DUCK FABRIC PAD		
	* A	B	C	D	K	E	F	G	H	J
Abutment No. 1	1.75"	24"	33"	-	-	23"	30.75"	1.5"	6.25"	30"
Pier No. 1	1.75"	25"	40"	34"	16"	24"	30.75"	1.5"	9.5"	30"
Pier No. 2	1.75"	21"	40"	34"	12"	20"	30.75"	1.5"	10"	30"
Pier No. 3	1.75"	17"	40"	34"	9"	16"	30.75"	1.5"	10"	30"
Pier No. 4	1.75"	12"	40"	34"	-	-	-	1.5"	10"	30"
Pier No. 5	1.75"	12"	40"	34"	-	-	-	1.5"	10"	30"
Pier No. 6	1.75"	17"	40"	34"	9"	16"	30.75"	1.5"	10"	30"
Pier No. 7	1.75"	21"	40"	34"	12"	20"	30.75"	1.5"	10"	30"
Pier No. 8	1.75"	25"	40"	34"	16"	24"	30.75"	1.5"	9.5"	30"
Abutment No. 2	1.75"	24"	33"	-	-	23"	30.75"	1.5"	6.25"	30"

* Refer to Beveled Sole Plate Table for additional requirements.
PTFE thickness = 0.09375"
Stainless Steel ℄ shall be 13 gage.
Dimension "A" does not include Stainless Steel PL.
Dimension "G" does not include PTFE.
Anchor Bolts, Nuts, and Washers shall conform to ASTM F3125 Grade A325 and shall be galvanized in accordance with ASTM A153.
Sole plates, stainless steel plates, PTFE, anchor bolts, and all hardware needed for the bearing assemblies shall be considered subsidiary to the Pay Items, "FIXED BEARING" and "EXPANSION BEARING, PTFE TYPE".

BEVELED SOLE PLATES

LOCATION	THICKNESS		
	A	A1	A2
Abutment No. 1	1.75"	1.625"	1.875"
Pier No. 1	1.75"	1.625"	1.875"
Pier No. 2	1.75"	1.625"	1.875"
Pier No. 3	1.75"	-	-
Pier No. 4	1.75"	-	-
Pier No. 5	1.75"	-	-
Pier No. 6	1.75"	-	-
Pier No. 7	1.75"	1.875"	1.625"
Pier No. 8	1.75"	1.875"	1.625"
Abutment No. 2	1.75"	1.875"	1.625"

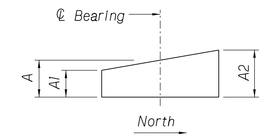

SECTION OF BEVELED SOLE PLATE
Not to Scale

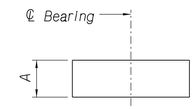

SECTION OF SOLE PLATE
Not to Scale

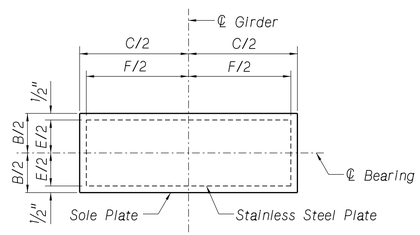

SOLE PLATE AT ABUTMENTS
Not to Scale

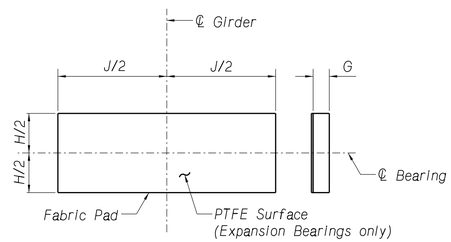

FABRIC PAD
Not to Scale

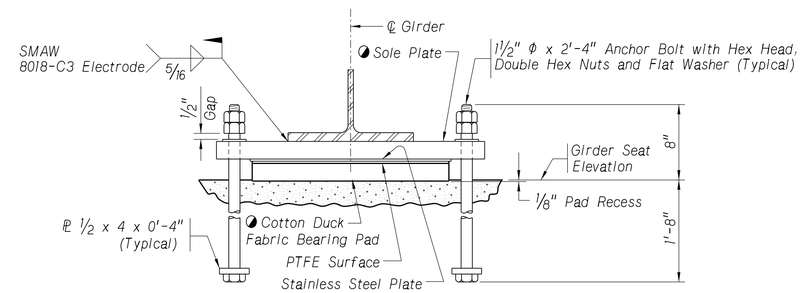

SECTION AT EXPANSION BEARING (PTFE TYPE)
AT PIER NOS. 1, 2, 3, 6, 7 & 8
Not to Scale

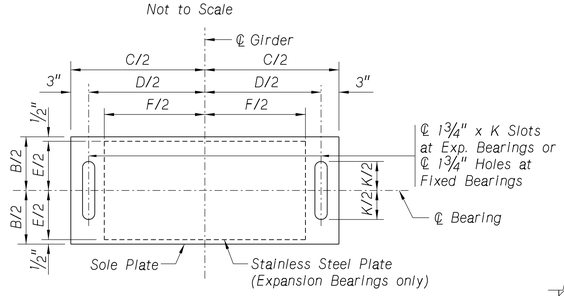

SOLE PLATE AT PIERS
Not to Scale

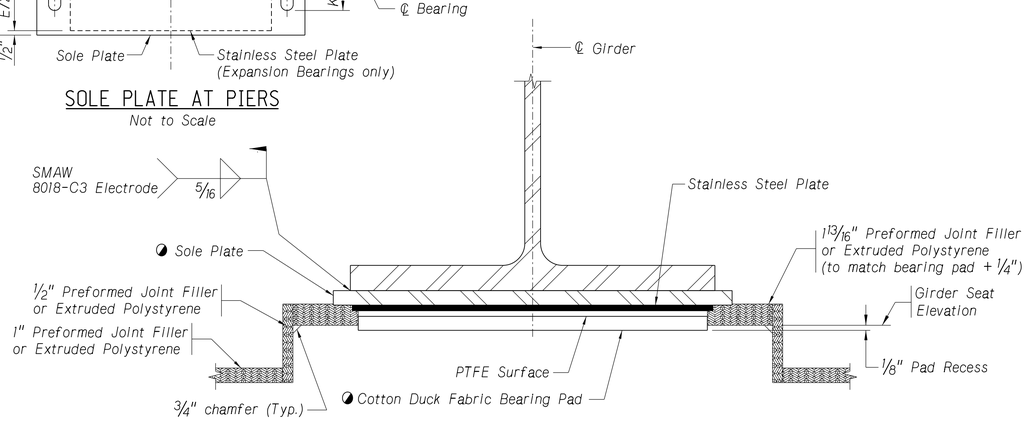

SECTION AT EXPANSION BEARING (PTFE TYPE)
AT ABUTMENTS
Not to Scale

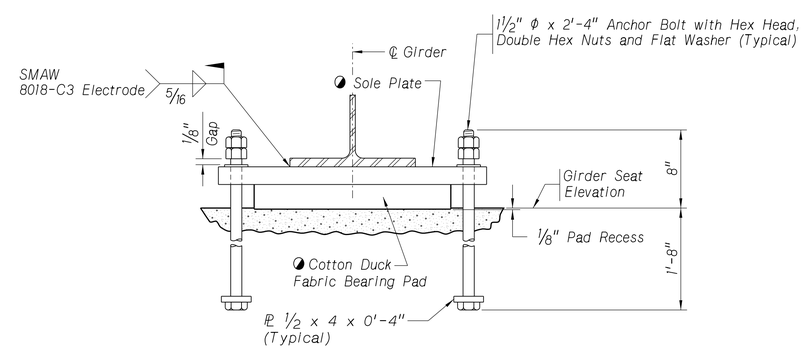

SECTION AT FIXED BEARING
AT PIER NOS. 4 & 5
Not to Scale

◑ Sole Plates and Fabric Pads need to be inspected prior to installation. Please contact the Bridge Office a minimum of three weeks before contractor's scheduled installation for inspection.

BURNS McDONNELL

1,289'-10" 9-SPAN
WELDED PLATE GIRDER BRIDGE
BEARING DETAILS

DATE JUL 2023
CHECKED BY SDH
DETAILED BY TWM
DESIGNED BY ASF

LOCATION COLUMBUS SOUTH
SKEW 0°
ROADWAY 28'-0"
DESIGN LIVE LOAD HL-93

COUNTY PLATTE
HWY. NO. US 30
REF. POST. 377.73L
STA. 409+22.09

NEBRASKA DEPARTMENT OF TRANSPORTATION - BRIDGE DIVISION

NEBRASKA
Good Life. Great Journey.
DEPARTMENT OF TRANSPORTATION

SPECIAL PLAN NO. 2

BRIDGE DIVISION.
Computer: B720560
User: nmfischer
Date: 07-JUL-2023 13:16
File: S030_37773L_CPG

PRELIMINARY PLAN
NOT FINAL - SUBJECT TO CHANGE

PROJECT NUMBER	SHEET NO.
NH-30-5(131)	S71

C.N. 31983

STRUCTURE NUMBER
S030 37773L

BRIDGE ENGINEER

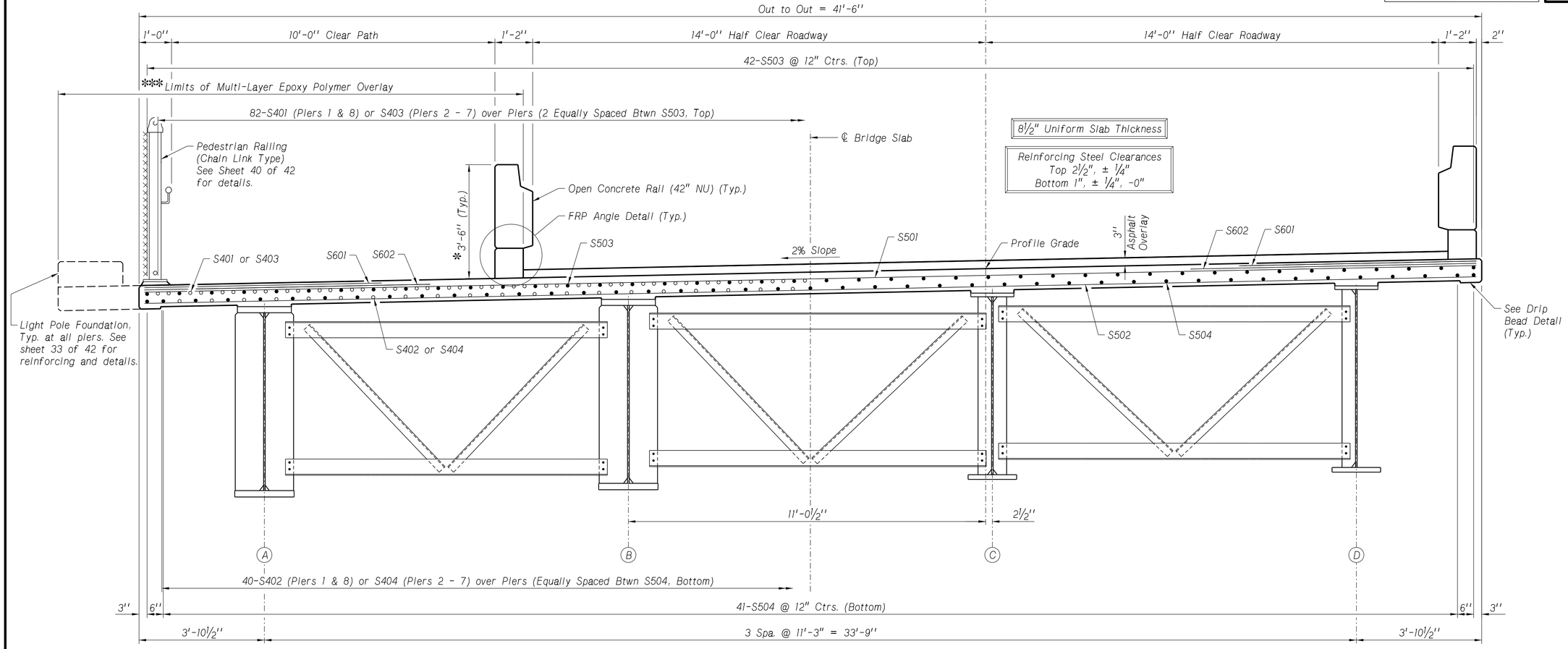

*Measured at front (traffic) face of rail

***Multi-Layer Epoxy Polymer Overlay on Shared Use Path to extend from End of Paving Section to End of Paving Section. Place under Concrete Rail between Posts. See Special Provisions.

HALF SECTION AT PIERS

HALF SECTION AT MIDSPAN

GENERAL BRIDGE CROSS-SECTION
Facing North
Scale: 5/8" = 1'-0"

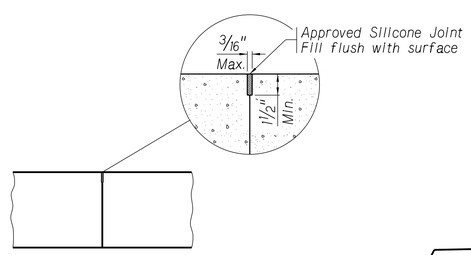

SLAB CONSTRUCTION JOINT
Not to Scale

The Contractor shall prepare and seal the joint according to the manufacturer's recommendation. Before sealing the joint wall surfaces shall be sandblasted to remove any deleterious material. After sandblasting the entire joint shall be cleaned with compressed air having a minimum pressure of 90 psi. The compressed air shall be free of any contaminates. The joint shall be dry at the time of sealing.

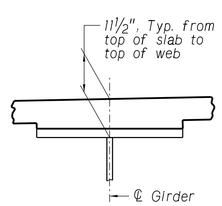

SHIM DETAIL
Not to Scale

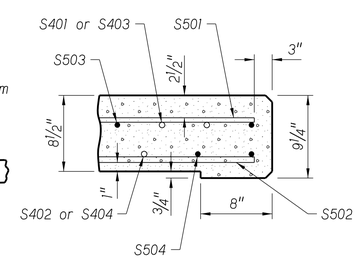

DRIP BEAD DETAIL
Not to Scale

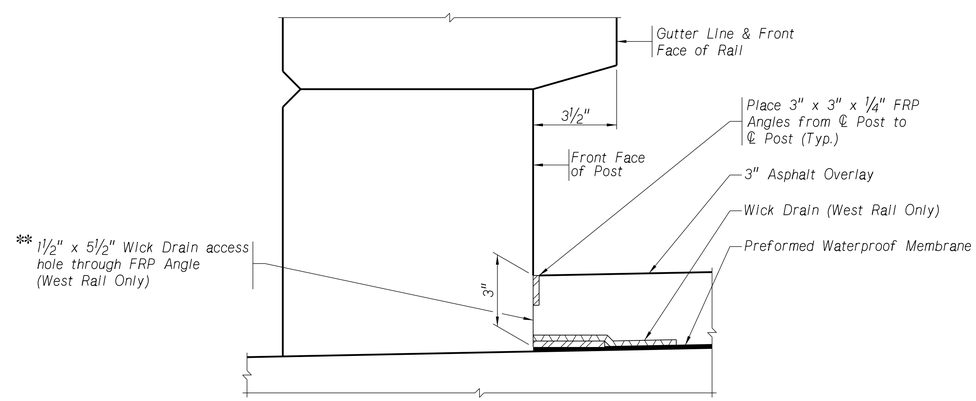

**Cut one access hole for every 64'-0" of length (one per eight post spacings). Locate hole at midpoint between posts.

FRP ANGLE DETAIL
Not to Scale

BURNS McDONNELL

1,289'-10" 9-SPAN
WELDED PLATE GIRDER BRIDGE
TYPICAL SECTION & SLAB DETAILS

LOCATION COLUMBUS SOUTH
SKEW 0°
ROADWAY 28'-0"
DESIGN LIVE LOAD HL-93
DATE JUL 2023
DETAILED BY TWM
CHECKED BY SDH
DESIGNED BY YZ

COUNTY PLATTE
HWY. NO. US 30
REF. POST. 377.73L
STA. 4094+22.09

NEBRASKA DEPARTMENT OF TRANSPORTATION - BRIDGE DIVISION

NEBRASKA
Good Life. Great Journey.
DEPARTMENT OF TRANSPORTATION

SPECIAL PLAN NO. 2

BRIDGE DIVISION.
Computer: B713227
User: asferdon
Date: 10-JUL-2023 21:53
File: S030_37773L_CPG

PRELIMINARY PLAN
NOT FINAL - SUBJECT TO CHANGE

PROJECT NUMBER	SHEET NO.
NH-30-5(131)	S72

C.N. 31983

STRUCTURE NUMBER
S030 37773L

BRIDGE ENGINEER

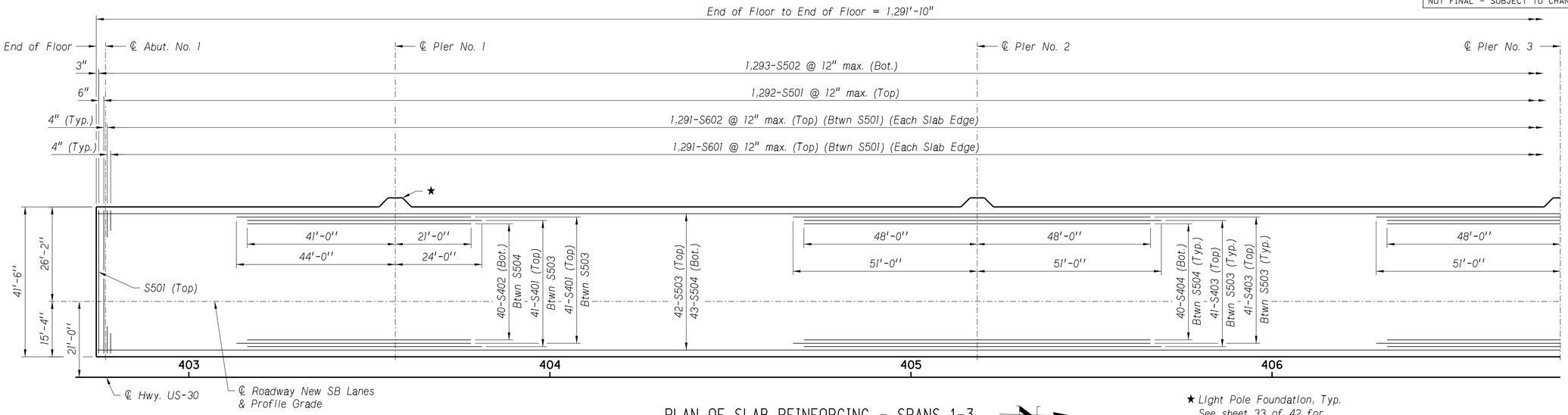

PLAN OF SLAB REINFORCING - SPANS 1-3

Scale: 1" = 15'-0"

★ Light Pole Foundation, Typ.
See sheet 33 of 42 for
reinforcing and dimensions.

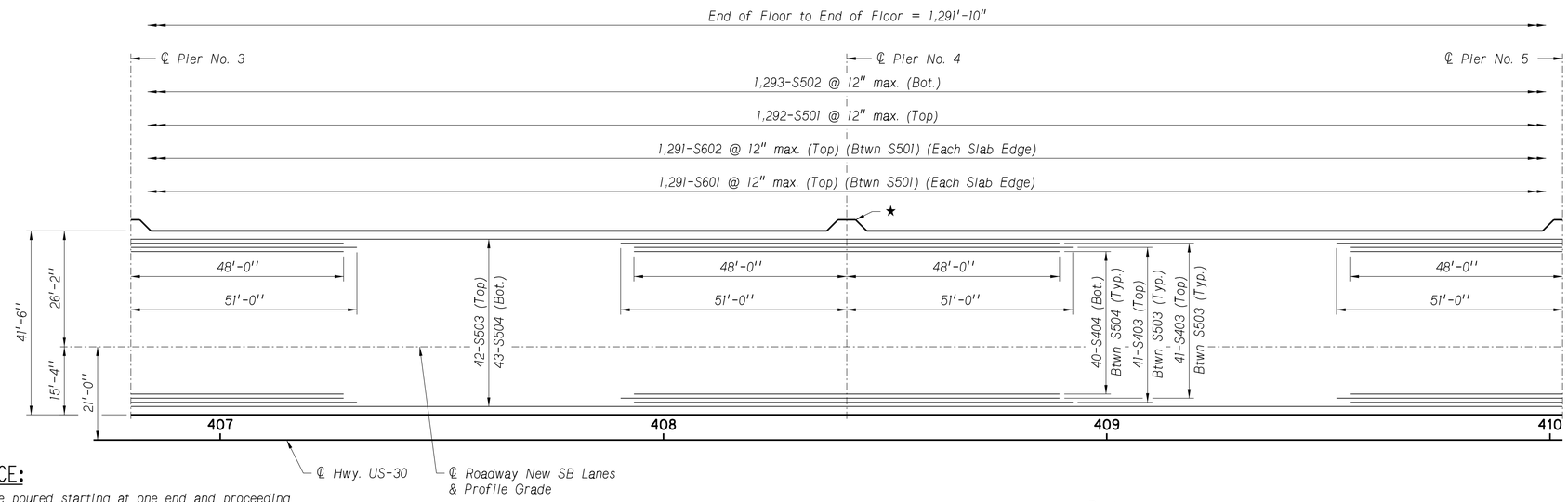

PLAN OF SLAB REINFORCING - SPANS 4-5

Scale: 1" = 15'-0"

POURING SEQUENCE:

The entire slab shall be poured starting at one end and proceeding to the other end, stopping at the completion of any "P" Section.

(P) = Positive moment section

(N) = Negative moment section

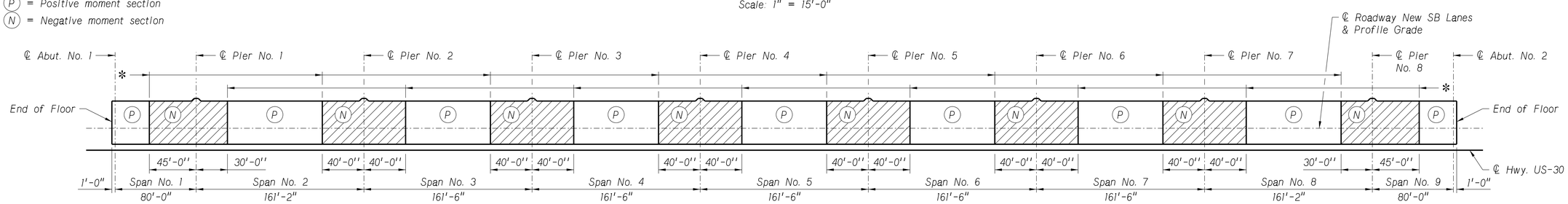

✻ Optional Construction Joints (Pour in Direction of Arrows)

POURING SEQUENCE

Scale: 1" = 50'-0"

BURNS McDONNELL

1,289'-10" 9-SPAN
WELDED PLATE GIRDER BRIDGE
SLAB REINFORCING PLAN 1

DATE JUL 2023

LOCATION COLUMBUS SOUTH
SKEW 0°
ROADWAY 28'-0"
DESIGN LIVE LOAD HL-93

CHECKED BY SDH
DETAILED BY TWM

COUNTY PLATTE
HWY. NO. US 30
REF. POST. 377.73L
STA. 4094+22.09

DESIGNED BY YZ

NEBRASKA DEPARTMENT OF TRANSPORTATION - BRIDGE DIVISION

NEBRASKA
Good Life. Great Journey.
DEPARTMENT OF TRANSPORTATION

SPECIAL PLAN NO. 2

30/42

BRIDGE DIVISION.

Computer: B720560

User: nmfischer

Date: 07-JUL-2023 13:17

File: S030_37773L_CPG

PRELIMINARY PLAN
NOT FINAL - SUBJECT TO CHANGE

PROJECT NUMBER	SHEET NO.
NH-30-5(131)	S73

C.N. 31983

STRUCTURE NUMBER
S030 37773L

BRIDGE ENGINEER

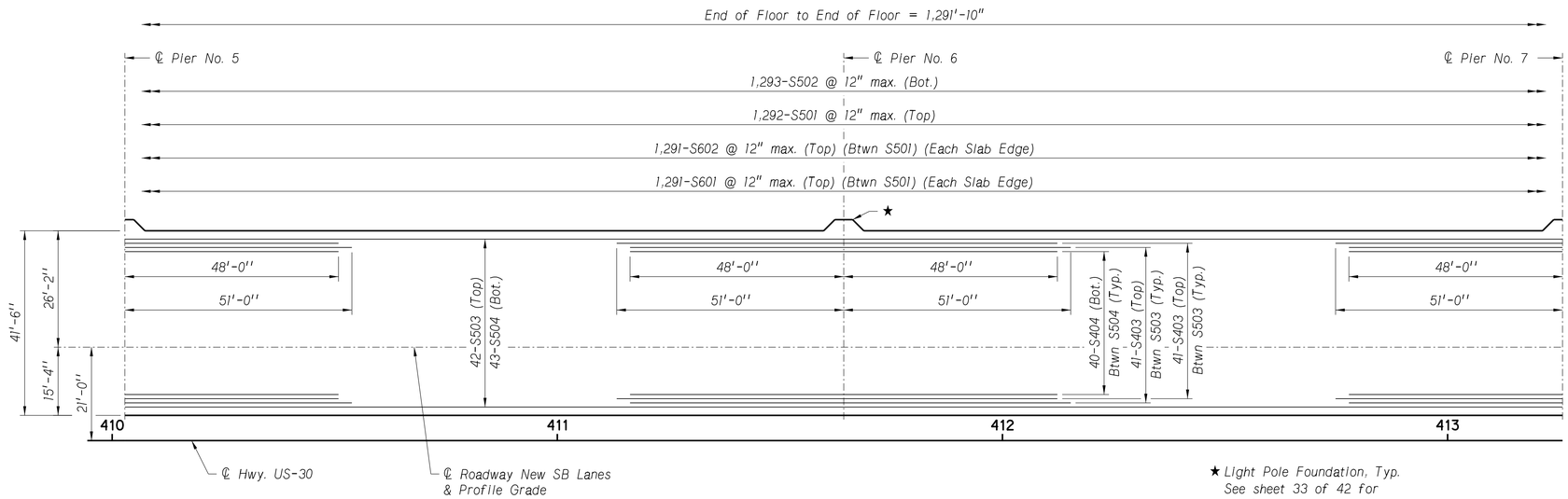

★ Light Pole Foundation, Typ. See sheet 33 of 42 for reinforcing and dimensions.

PLAN OF SLAB REINFORCING - SPANS 6-7

Scale: 1" = 15'-0"

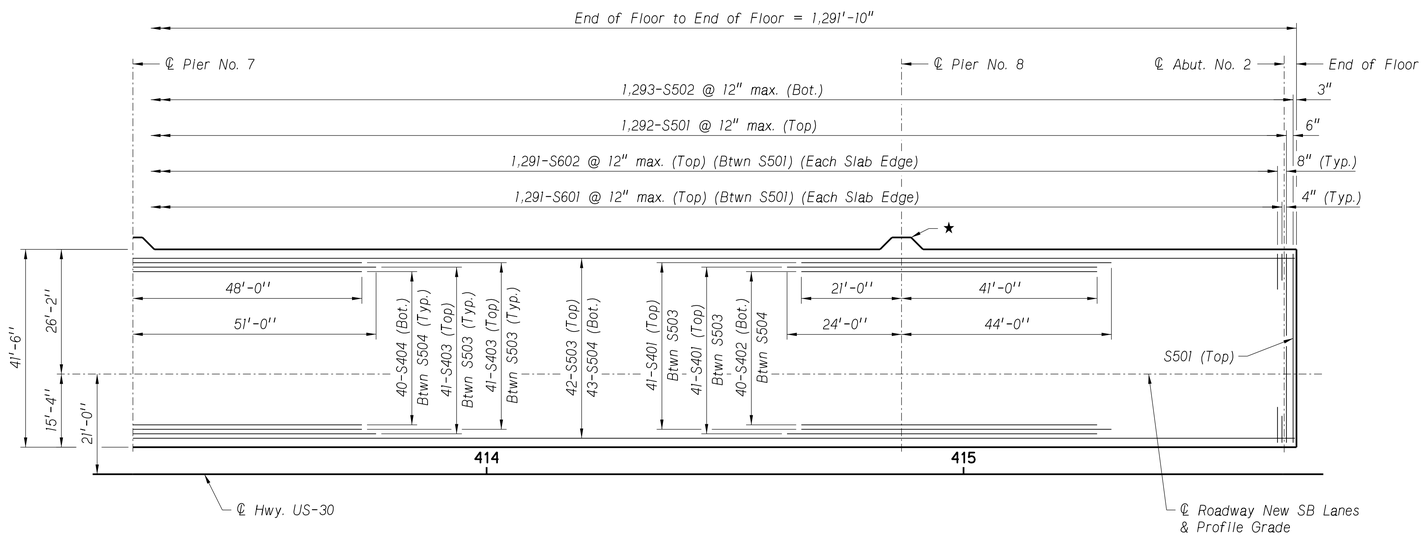

PLAN OF SLAB REINFORCING - SPANS 8-9

Scale: 1" = 15'-0"

1,289'-10" 9-SPAN
WELDED PLATE GIRDER BRIDGE
SLAB REINFORCING PLAN 2

DATE JUL 2023

LOCATION COLUMBUS SOUTH
SKEW 0°
ROADWAY 28'-0"
DESIGN LIVE LOAD HL-93

COUNTY PLATTE
HWY. NO. US 30
REF. POST. 377.73L
STA. 409+22.09

DESIGNED BY YZ
DETAILED BY TWM
CHECKED BY SDH

NEBRASKA DEPARTMENT OF TRANSPORTATION - BRIDGE DIVISION

NEBRASKA
Good Life. Great Journey.
DEPARTMENT OF TRANSPORTATION

BURNS McDONNELL

SPECIAL PLAN NO. 2

31/42

BRIDGE DIVISION.

Computer: B720560

User: nmfischer

Date: 07-JUL-2023 13:18

File: S030_37773L_CPG

PRELIMINARY PLAN
NOT FINAL - SUBJECT TO CHANGE

PROJECT NUMBER	SHEET NO.
NH-30-5(131)	S74

C.N. 31983
STRUCTURE NUMBER S030 37773L

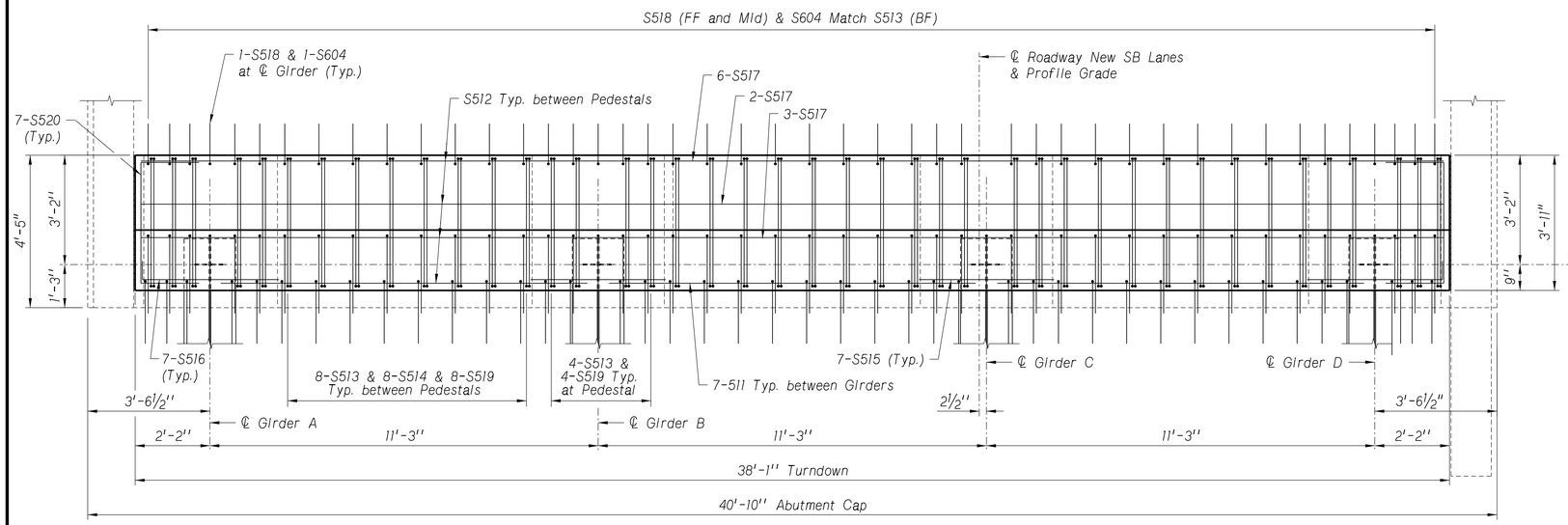

PLAN OF TURNDOWN

Turndown at Abutment No. 2 shown. Abutment No. 1 similar.
Not to Scale

★ Preformed Joint Filler or Extruded Polystyrene (to match bearing pad + ¼"). See "Bearing Details", sheet 28 of 42, for dimensions.

■ 1" Preformed Joint Filler or Extruded Polystyrene, (Typ.)

▲ ½" Preformed Joint Filler or Extruded Polystyrene, (Typ.)

(EF) = Each Face
(FF) = Front Face
(BF) = Back Face
(Mid) = Between Faces

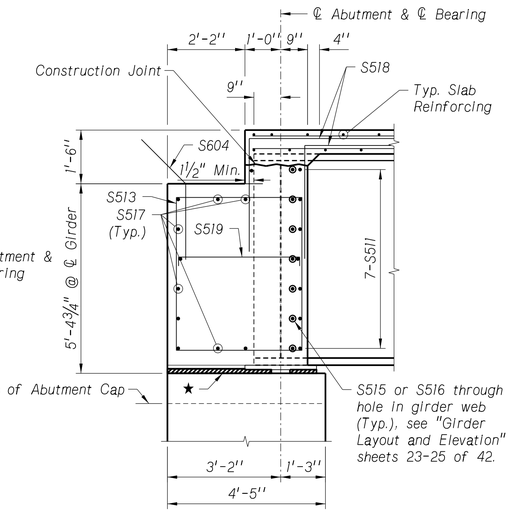

SECTION B-B

Not to Scale

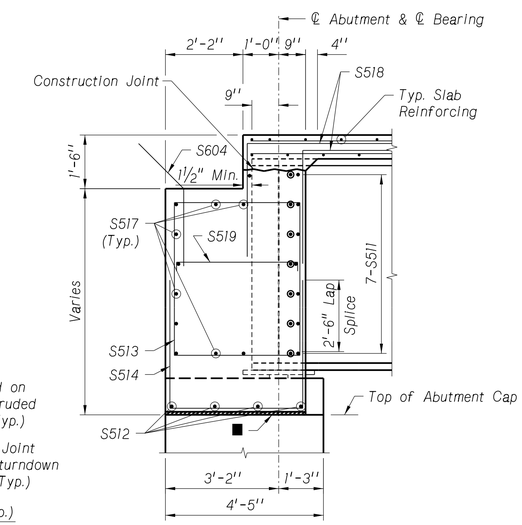

SECTION A-A

Not to Scale

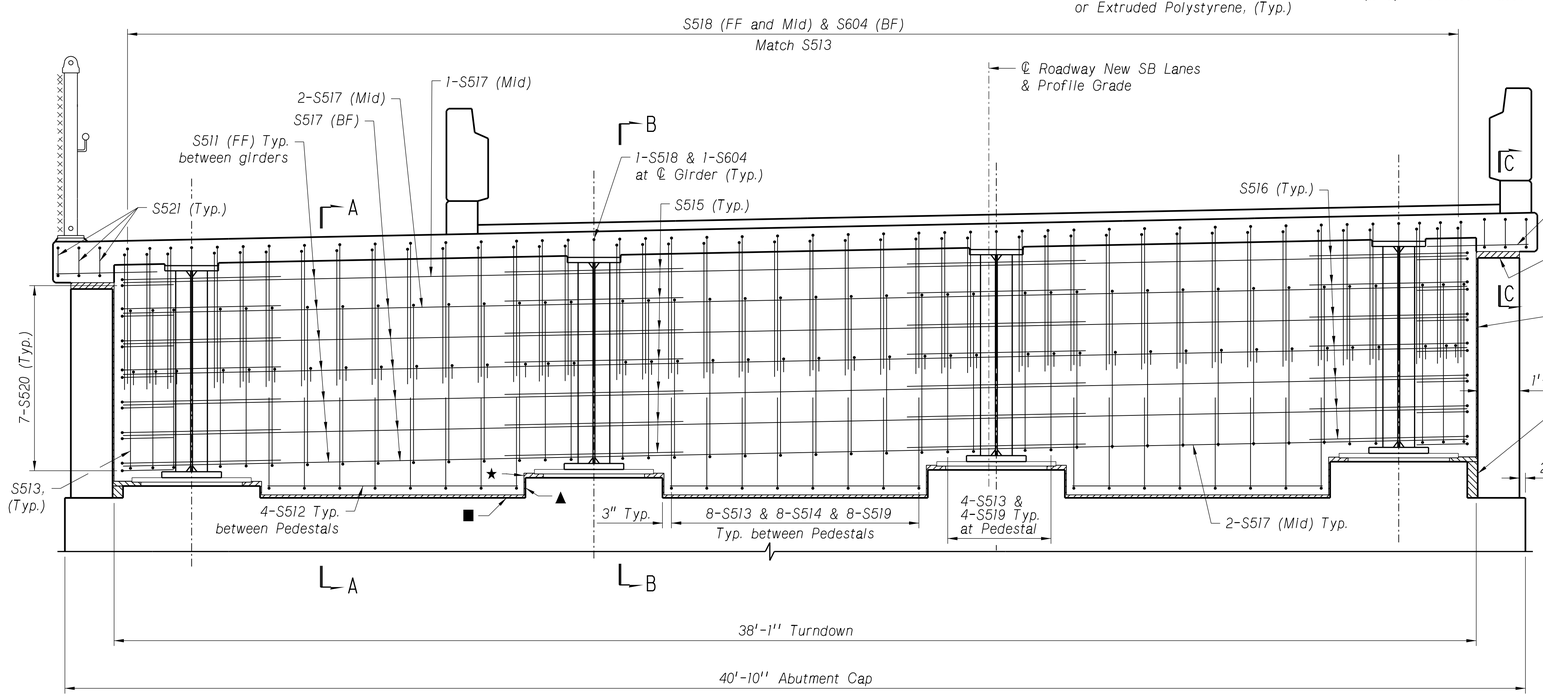

ELEVATION OF TURNDOWN

Turndown at Abutment No. 2 shown. Abutment No. 1 similar.
Not to Scale

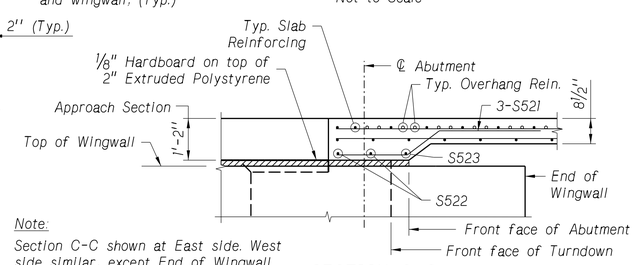

Note:
Section C-C shown at East side. West side similar, except End of Wingwall matches Front Face of Abutment. Use identical thickened slab and reinforcing on both East and West sides.

SECTION C-C

Not to Scale

BURNS McDONNELL

BRIDGE ENGINEER

1,289'-10" 9-SPAN
WELDED PLATE GIRDER BRIDGE
SLAB TURNDOWNS

DATE JUL 2023
CHECKED BY ASF
DETAILED BY TWM
DESIGNED BY SDH

LOCATION COLUMBUS SOUTH
SKEW 0°
ROADWAY 28'-0"
DESIGN LIVE LOAD HL-93

COUNTY PLATTE
HWY. NO. US 30
REF. POST. 377.73L
STA. 409+22.09

NEBRASKA DEPARTMENT OF TRANSPORTATION - BRIDGE DIVISION

NEBRASKA
Good Life. Great Journey.
DEPARTMENT OF TRANSPORTATION

SPECIAL PLAN NO. 2

BRIDGE DIVISION.
Computer: B720560
User: nmfischer
Date: 07-JUL-2023 13:18
File: S030_37773L_CPG

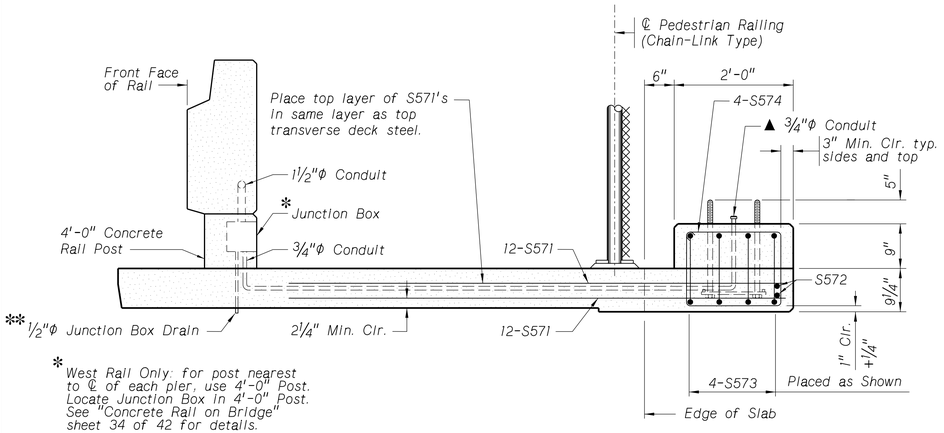

* West Rail Only: for post nearest to ℄ of each pier, use 4'-0" Post. Locate Junction Box in 4'-0" Post. See "Concrete Rail on Bridge" sheet 34 of 42 for details.

** Angle drain pipe as needed to be clear of pier cap. Minimum horizontal clearance from drain pipe stubout to face of pier cap = 3"

▲ Extend Conduit 1¾" beyond top of concrete, includes stubout with cap.

ELEVATION OF STANDARD LIGHT POLE FOUNDATION

Not to Scale

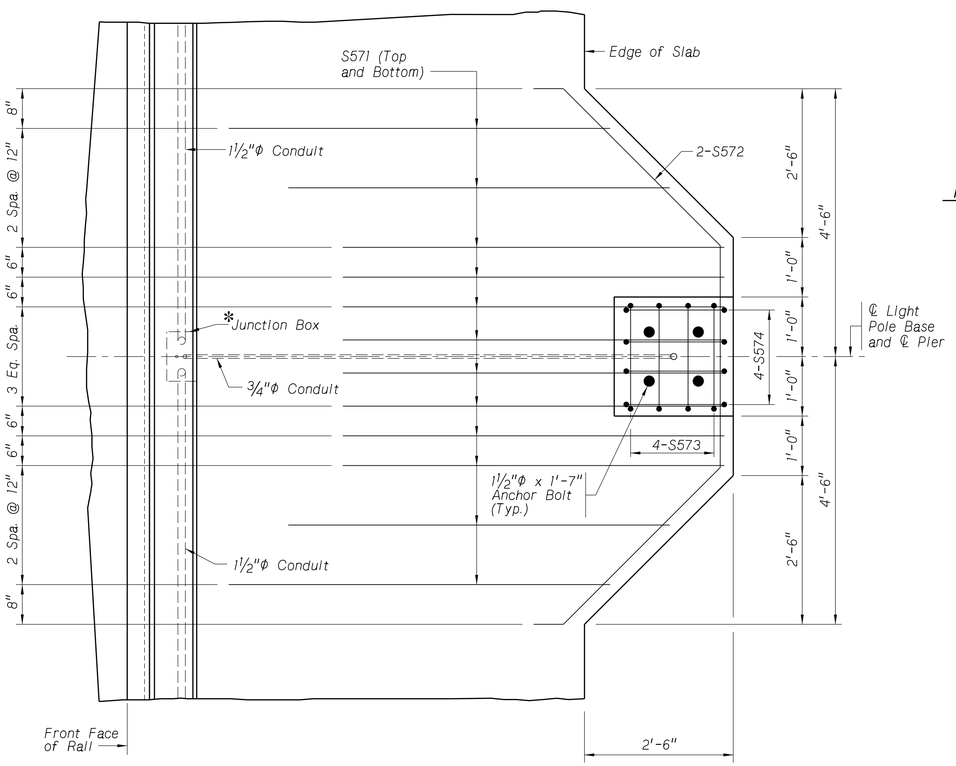

PLAN OF STANDARD LIGHT POLE FOUNDATION

Not to Scale

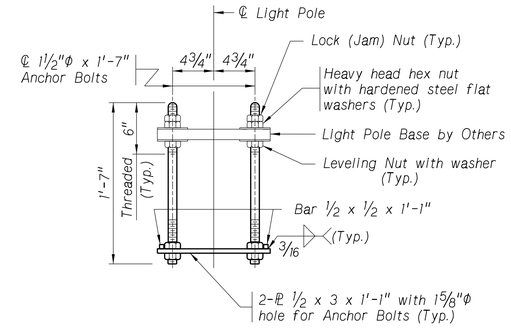

ELEVATION

Not to Scale

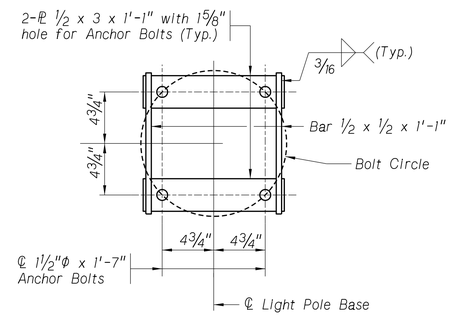

PLAN

ANCHOR BOLT LAYOUT FOR LIGHT POLE FOUNDATION

Not to Scale

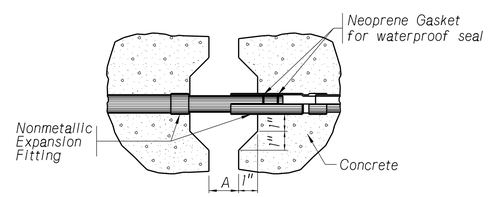

EXPANSION FITTING ELEVATION VIEW

Not to Scale

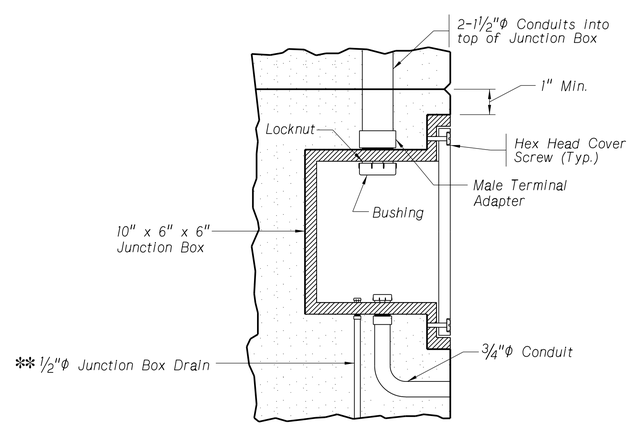

JUNCTION BOX

Not to Scale

GENERAL NOTES - ELECTRICAL CONDUIT INSTALLATION

All conduits shall be PVC and bear the U.L. label, with the exception that conduit stub outs shall be Type GRS or FMC.

All fittings used with PVC conduit shall be PVC. Metallic fittings are not acceptable.

Contractor shall use expansion fittings capable of accomodating the full thermal movement range in the table below.

Expansion fittings shall be installed with conduit positioned with respect to ambient temperature and shall bear the U.L. label.

Conduit bends, elbows, and offsets shall be accurately formed.

The conduit installation shall be performed by or under the direct supervision of a competent Journeyman Electrician or Lineman.

Junction boxes for conduit shall be machineable quality gray iron castings, outside-flanged, with recessed gasket cover. Cover screws shall be hex head stainless steel or brass. Boxes shall be NEMA 4 rated and have a hot dipped galvanized finish.

Each junction box shall be provided with a drainpipe. Conduit entrances into the junction box shall be slip holes. Sealing type lock nuts shall be used at all conduit entrances.

Junction boxes shall be type "YR" as manufactured by O.Z. - Gedney Company, type "ER" as manufactured by Spring City Electrical Mfg. Company, Series "WJBF" as manufactured by Cooper Crouse-Hinds or approved equal.

Junction boxes, expansion fittings, all ¾" conduit, conduit drains, ¾" Liquidtight Flexible Metal Conduit, couplings, anchor bolt assemblies and all other hardware and miscellaneous fittings required for the installation of the conduit system will be subsidiary to the item, "1½" DIA. CONDUIT IN BRIDGE".

Fittings used with Liquidtight Flexible Metal Conduit must be approved for the application.

Anchor bolts shall conform to the requirements of AASHTO M 314, Grade 55, (length as shown).

Anchor bolts shall be straight rods threaded 6" on both ends.

Each anchor bolt shall be furnished complete with five heavy hex nuts meeting the requirements of ASTM A 563 Grade C3 or DH3 and two hardened steel flat washers conforming to ASTM F 436 Type 3 or ASTM A436M Type 3. Only flat washers will be used. The use of lock washers will not be permitted.

All bolts, nuts, washers, and the lower anchor plate assembly shall be galvanized in accordance with ASTM A 153.

The contractor shall furnish a certification stating that the anchor bolt material meets the requirements of the applicable specifications. The certification shall include a report of the tensile test results and chemical analysis. The report shall also include the name of the steel producer, AASHTO or ASTM designation number, grade, heat number, size and authorized signature.

Conduit drains with 1" projection from the concrete face, must be provided at each junction box and at low spots in the electrical conduit.

See sheet 34 of 42 for typical Conduit Drain details at locations other than junction boxes.

Expansion Fitting Dimensions		
Location	Dim. "A"	Full Thermal Movement Range
End of Floor	0"	8"
Rail Expansion Joint at Grade Beam	Varies, see "Rail on Approach Slab" sheets 38 & 39 of 42.	10"

BURNS McDONNELL

BRIDGE ENGINEER

1,289'-10" 9-SPAN
WELDED PLATE GIRDER BRIDGE
LIGHT POLE FOUNDATION

COUNTY PLATTE
HWY. NO. US 30
REF. POST. 377.73L
STA. 409+22.09

LOCATION COLUMBUS SOUTH
SKEW 0°
ROADWAY 28'-0"
DESIGN LIVE LOAD HL-93

DATE JUL 2023
CHECKED BY SDH
DETAILED BY TWM
DESIGNED BY ASF

NEBRASKA DEPARTMENT OF TRANSPORTATION - BRIDGE DIVISION

NEBRASKA
Good Life. Great Journey.
DEPARTMENT OF TRANSPORTATION

BRIDGE DIVISION.
Computer: B720560
User: nmfischer
Date: 07-JUL-2023 13:18
File: S030_37773L_CPG

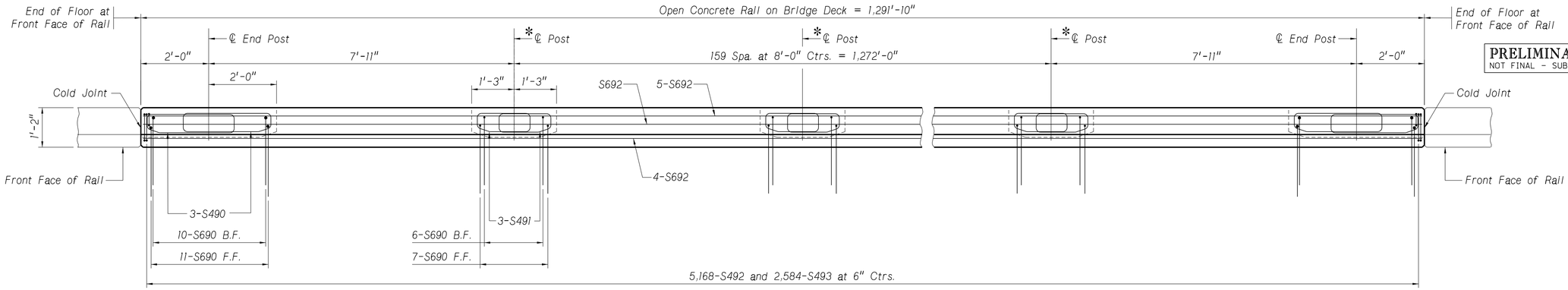

PARTIAL PLAN OF OPEN CONCRETE RAIL ON BRIDGE

Not to Scale

*West Rail Only: for post nearest to ℄ of each pier, use 4'-0" Post with Junction Box. For all other posts, use 2'-6" Post.

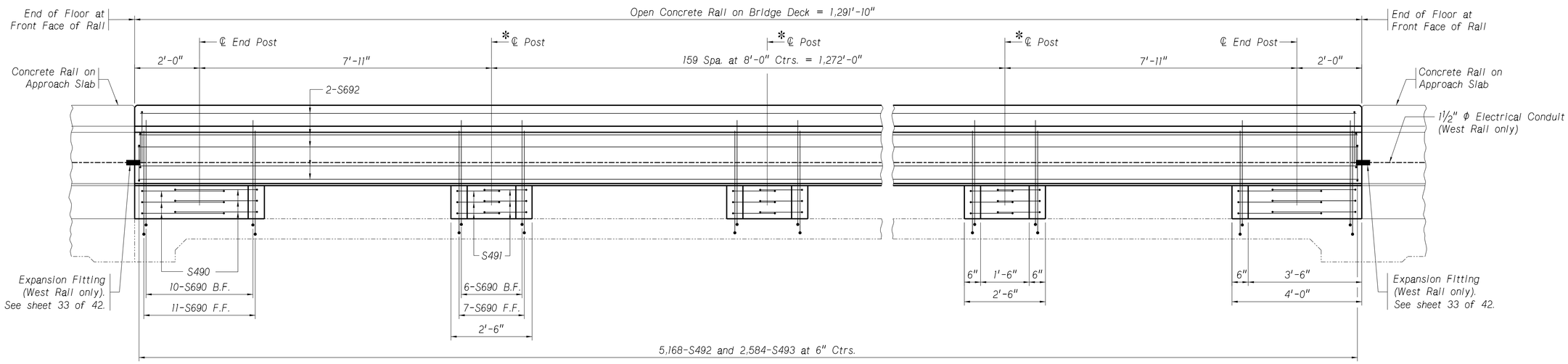

PARTIAL ELEVATION OF OPEN CONCRETE RAIL ON BRIDGE

Not to Scale

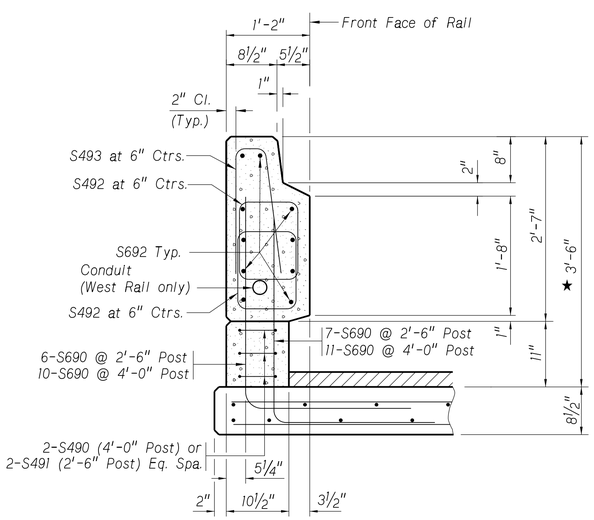

TYPICAL SECTION OF RAIL

East Rail shown. West Rail similar.
Scale: 1" = 1'-0"

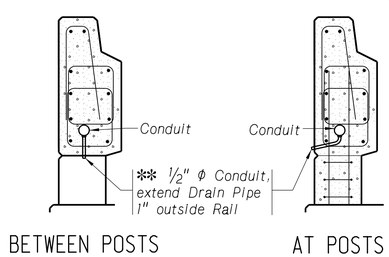

DRAIN PIPE DETAILS

West Rail only.
Scale: 3/4" = 1'-0"

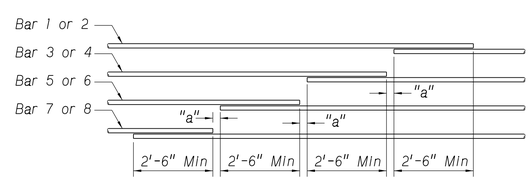

"a" ≥ Zero

LAP DETAIL

Not to Scale

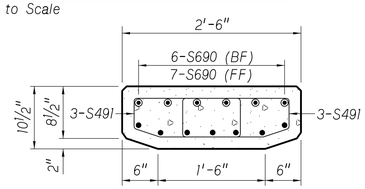

PLAN OF 2'-6" POST

Scale: 1" = 1'-0"

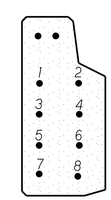

RAIL SECTION

See Lap Detail
Scale: 1" = 1'-0"

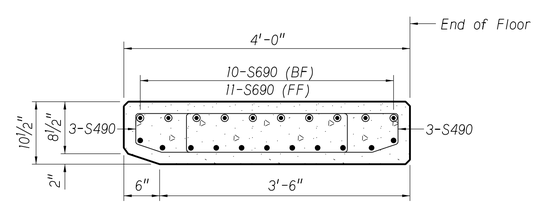

PLAN OF 4'-0" END POST

Scale: 1" = 1'-0"

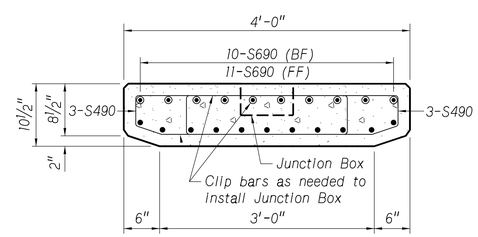

PLAN OF 4'-0" POST WITH JUNCTION BOX AT PIERS

Scale: 1" = 1'-0"

NOTES:

Posts must be plumb.

★ Measured at front face of rail.

For Bills of Bars see sheet 35 of 42.

Steel Forms are required.

(EF) = Each Face
(FF) = Front Face
(BF) = Back Face

※ Place at least one drain per span and at all low spots.

◉ Circled bars indicate placement in the top layer of slab reinforcement.

BURNS McDONNELL

PROJECT NUMBER	SHEET NO.
NH-30-5(131)	S76

C.N. 31983
STRUCTURE NUMBER S030 37773L

PRELIMINARY PLAN
NOT FINAL - SUBJECT TO CHANGE

BRIDGE ENGINEER

1,289'-10" 9-SPAN
WELDED PLATE GIRDER BRIDGE
CONCRETE RAIL ON BRIDGE

DATE JUL 2023
CHECKED BY ASF
DETAILED BY TWM
DESIGNED BY SDH

LOCATION COLUMBUS SOUTH
SKEW 0°
ROADWAY 28'-0"
DESIGN LIVE LOAD HL-93

COUNTY PLATTE
HWY. NO. US 30
REF. POST. 377.73L
STA. 409+22.09

NEBRASKA DEPARTMENT OF TRANSPORTATION - BRIDGE DIVISION

NEBRASKA
Good Life. Great Journey.
DEPARTMENT OF TRANSPORTATION

SPECIAL PLAN NO. 2

BRIDGE DIVISION.
Computer: B720560
User: nmfischer
Date: 07-JUL-2023 13:19
File: S030_37773L_CPG

BILL OF BARS

	MARK	NUMBER	LENGTH	TYPE	"A"	"B"	"C"	"D"	"E"	"F"	PIN	HOOK	WEIGHT LB
SLAB	S601	2,582	7'-0"	STR									27,147
	S602	2,582	8'-6"	STR									32,964
	S604	92	3'-4"	101	1'-8"	1'-8"	1'-2"				4½"		461
	S501	1,294	41'-0"	STR									55,335
	S502	1,293	41'-0"	STR									55,293
	S503	42	1357'-6" ◑	STR									59,467
	S504	43	1357'-6" ◑	STR									60,883
	S511	42	10'-10"	STR									475
	S512	24	7'-0"	STR									175
	S513	84	16'-11"	107	4'-7"	3'-5"					2½"	5½"	1,482
	S514	48	11'-5"	103	4'-0"	3'-5"	4'-0"				2½"		572
	S515	28	5'-0"	STR									146
	S516	28	5'-5"	104	1'-0"	4'-5"					2½"		158
	S517	22	37'-9"	STR									866
	S518	176	6'-4"	104	3'-2"	3'-2"					3¾"		1,163
	S519	84	4'-5"	113		3'-5"					2½"	6"	387
	S520	28	6'-9"	103	1'-9"	3'-3¾"	1'-9"				2½"		197
	S521	12	4'-5"	117	0'-9⅞"	1'-11"	0'-7"	1'-11"			3¾"		55
	S522	8	3'-0"	STR									25
	S523	4	1'-2"	STR									5
	S571	192	10'-4"	STR									2,069
	S572	16	18'-5"	134	3'-7¼"	3'-10¾"	2'-6⅝"	2'-6⅝"	3'-7¼"	3'-8"	3¾"		307
	S573	32	6'-0"	107	1'-0½"	1'-6"					2½"	5½"	200
	S574	32	6'-3"	107	1'-1¾"	1'-6"					2½"	5½"	209
	S401	164	67'-5" ✻	STR									7,386
	S402	80	64'-5" ✻	STR									3,442
	S403	492	101'-5" ✻	STR									33,331
	S404	240	98'-5" ✻	STR									15,778
	SUBTOTAL =												359,978 LB
RAIL ON BRIDGE	S690	4,308	6'-4"	104	3'-2"	3'-2"					4½"		40,981
	S692	20	1346'-6" ▲	STR									40,449
	S490	72	7'-9"	130	2'-7½"	0'-6½"	3'-0"	0'-5"	0'-5"	0'-4½"	2"	4½"	373
	S491	1,872	4'-9"	130	1'-1½"	0'-6½"	1'-6"	0'-5"	0'-5"	0'-4½"	2"	4½"	5,940
	S492	10,336	4'-7"	107	1'-1"	0'-10"					2"	4½"	31,645
	S493	5,168	4'-4"	131	2'-0"	0'-4"	2'-0"	0'-3"			2"		14,960
	SUBTOTAL =												134,348 LB
	TOTAL =												494,326 LB

NOTES:

FOR BAR TYPES, BENDING DIAGRAMS, HOOK LENGTHS & PIN DIAMETERS, SEE SHEET 42 OF 42.

THE NUMBER OF LAP SPLICES ARE CALCULATED BASED ON 60'-0" LENGTHS OF REINFORCING STEEL BARS. SPLICES ON BARS SHORTER THAN 60'-0" WILL REQUIRE ADDITIONAL LAP SPLICES AT NO ADDITIONAL EXPENSE TO NDOT.

◑ - Includes (22) 3'-0" Laps

✻ - Includes (1) 2'-5" Lap

▲ - Includes (22) 2'-6" Laps

BAR SETS

MARK	MAX. LENGTH	MIN. LENGTH	NO. OF SETS	BARS PER SET

PRELIMINARY PLAN
NOT FINAL - SUBJECT TO CHANGE

BURNS McDONNELL

PROJECT NUMBER NH-30-5(131) | SHEET NO. S77

C.N. 31983

STRUCTURE NUMBER S030 37773L

BRIDGE ENGINEER

1,289'-10" 9-SPAN
WELDED PLATE GIRDER BRIDGE
SLAB DETAILS & BILL OF BARS

COUNTY PLATTE | LOCATION COLUMBUS SOUTH
HWY. NO. US 30 | SKEW 0°
REF. POST. 377.73L | ROADWAY 28'-0"
STA. 409+22.09 | DESIGN LIVE LOAD HL-93
DESIGNED BY YZ | DETAILED BY NMF | CHECKED BY SDH | DATE JUL 2023

NEBRASKA DEPARTMENT OF TRANSPORTATION - BRIDGE DIVISION

NEBRASKA
Good Life. Great Journey.
DEPARTMENT OF TRANSPORTATION

SPECIAL PLAN NO. 2 | 35/42

File: S030_37773L_CPG Date: 07-JUL-2023 13:19 User: nmfischer Computer: B720560 BRIDGE DIVISION.

PRELIMINARY PLAN
NOT FINAL - SUBJECT TO CHANGE

PROJECT NUMBER	SHEET NO.
NH-30-5(131)	S78

C.N. 31983
STRUCTURE NUMBER S030 37773L

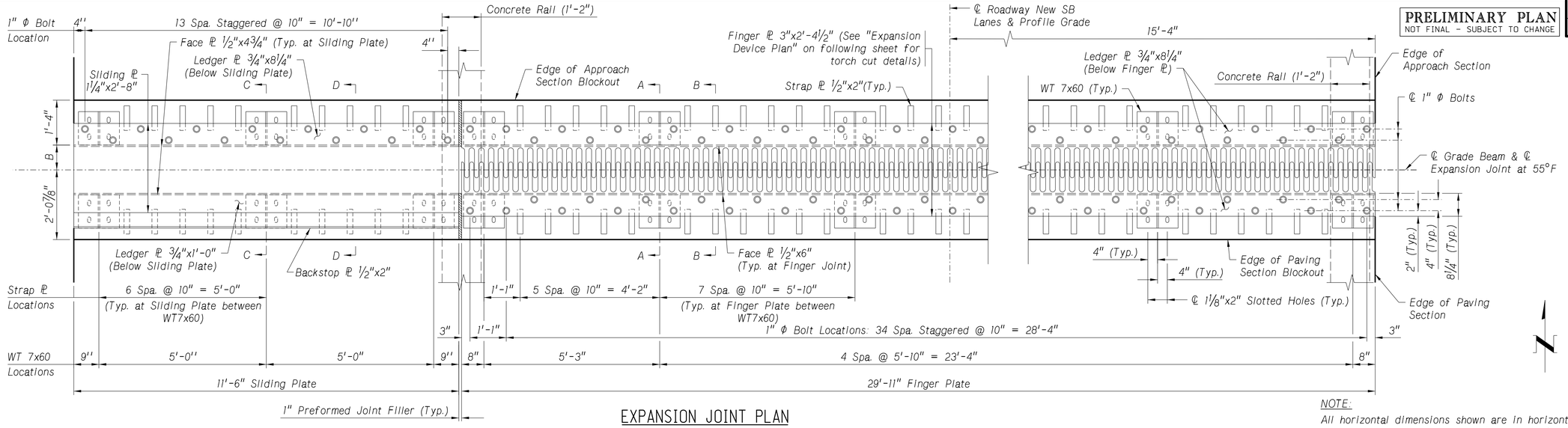

EXPANSION JOINT PLAN

Joint No. 1 shown. Joint No. 2 similar. Not to Scale.

NOTE:
All horizontal dimensions shown are in horizontal plane only. No allowances have been made for vertical curve or roadway cross slope.

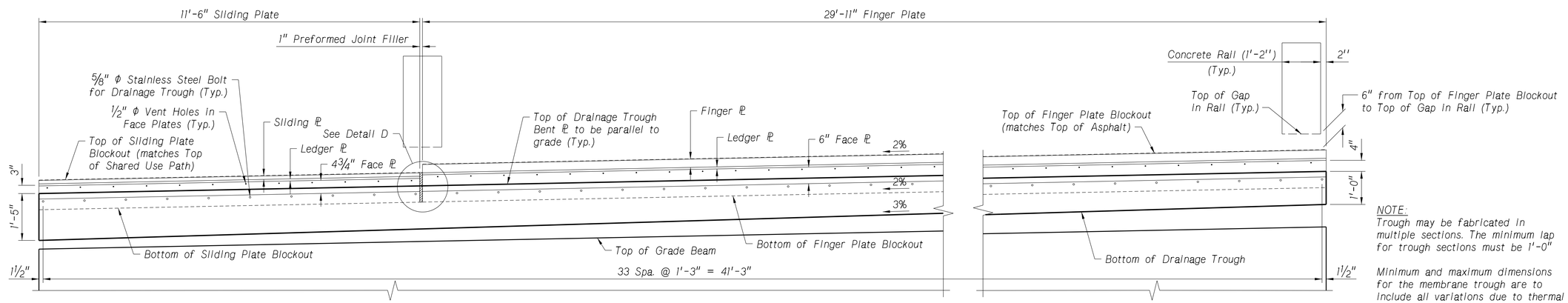

EXPANSION JOINT ELEVATION

Joint No. 1 shown. Joint No. 2 similar. Not to Scale.

NOTE:
Trough may be fabricated in multiple sections. The minimum lap for trough sections must be 1'-0"

Minimum and maximum dimensions for the membrane trough are to include all variations due to thermal expansion.

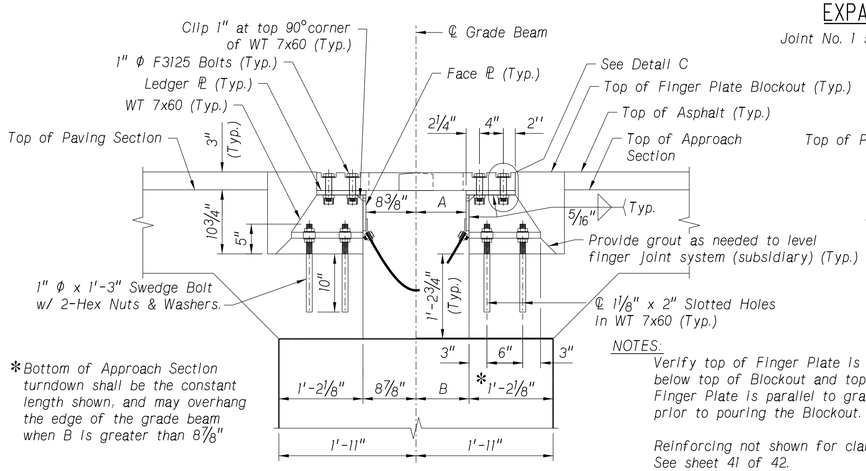

NOTES:
Verify top of Finger Plate is 1/8" below top of Blockout and top of Finger Plate is parallel to grade prior to pouring the Blockout.

Reinforcing not shown for clarity. See sheet 41 of 42.

Swedge Bolts shall be drilled and epoxied in place.

SECTION A-A AT FINGER JOINT

Not to Scale

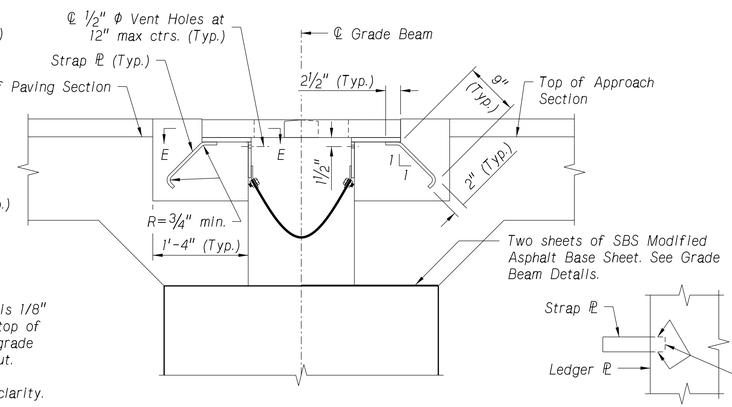

SECTION B-B AT FINGER JOINT

Not to Scale

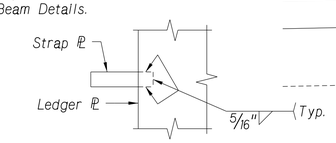

SECTION E-E

Not to Scale

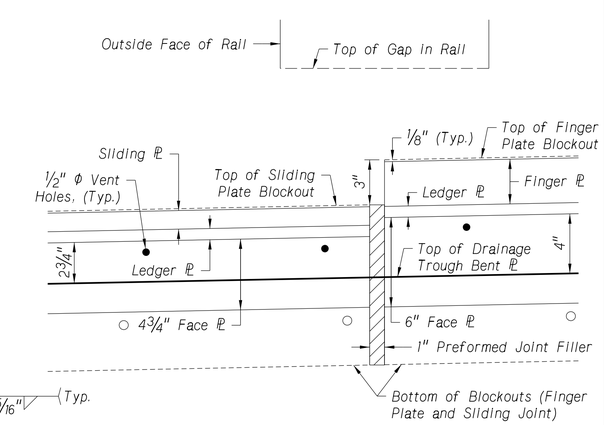

DETAIL D

Not to Scale

BURNS McDONNELL

BRIDGE ENGINEER

1,289'-10" 9-SPAN
WELDED PLATE GIRDER BRIDGE
EXPANSION JOINT DETAILS 1

DATE JUL 2023
CHECKED BY YZ
DETAILED BY TWM
DESIGNED BY ASF

LOCATION COLUMBUS SOUTH
SKEW 0°
ROADWAY 28'-0"
DESIGN LIVE LOAD HL-93

COUNTY PLATTE
HWY. NO. US 30
REF. POST. 377.73L
STA. 409+22.09

NEBRASKA DEPARTMENT OF TRANSPORTATION - BRIDGE DIVISION

NEBRASKA
Good Life. Great Journey.
DEPARTMENT OF TRANSPORTATION

SPECIAL PLAN NO. 2

BRIDGE DIVISION.
File: S030_37773L_CPG Date: 07-JUL-2023 16:50 User: nmfischer Computer: B720560

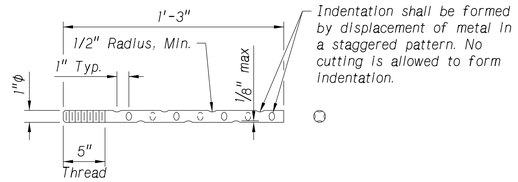

SWEDGE BOLT DETAIL

Not to Scale

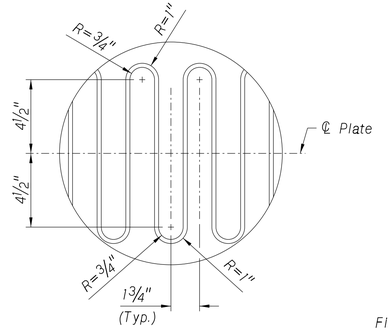

DETAIL A

Not to Scale

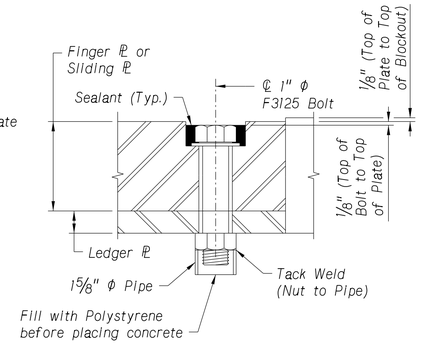

DETAIL C

Not to Scale

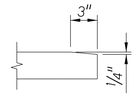

DETAIL B

Not to Scale

*EXPANSION JOINT SETTINGS				
Joint No.	Dim.	-10°F	55°F	120°F
1	A	11 5/8"	8 3/8"	5 1/8"
	B	12 1/8"	8 7/8"	5 5/8"
2	A	11 5/8"	8 3/8"	5 1/8"
	B	12 1/8"	8 7/8"	5 5/8"

* Decrease gap 1/4" for every 5°F over 55°F
Increase gap 1/4" for every 5°F under 55°F

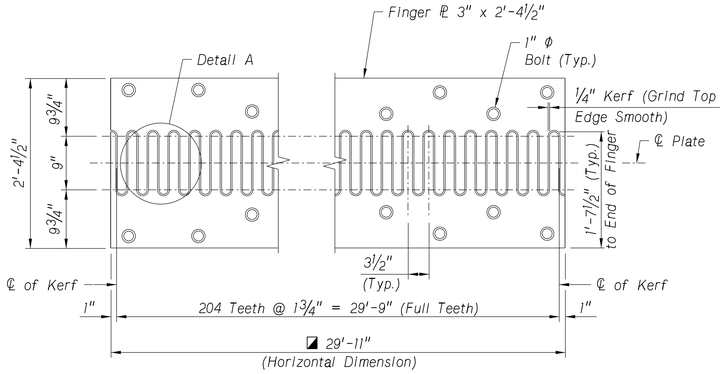

EXPANSION DEVICE PLAN SHOWING TOOTH LAYOUT

Not to Scale

NOTES:

◪ Finger Plate may be fabricated and shipped in 2 pieces and field welded and joined together in field. Field splice location and details shall be submitted by Contractor in Shop Plans.

Flame cut from ℙ 3" x 2'-4 1/2"

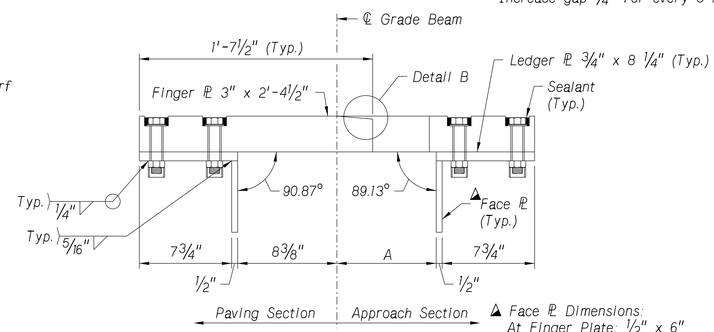

▲ Face ℙ Dimensions:
At Finger Plate: 1/2" x 6"
At Sliding Plate: 1/2" x 4 3/4"

EXPANSION OPENING DETAIL

Not to Scale

NOTE:

Top of expansion device is to be parallel to grade.

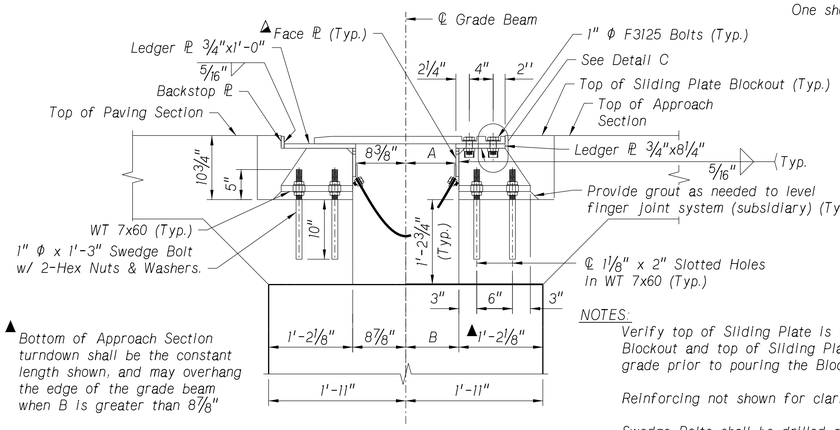

▲ Bottom of Approach Section turndown shall be the constant length shown, and may overhang the edge of the grade beam when B is greater than 8 7/8"

NOTES:

Verify top of Sliding Plate is 1/8" below top of Blockout and top of Sliding Plate is parallel to grade prior to pouring the Blockout.

Reinforcing not shown for clarity. See sheet 41 of 42.

Swedge Bolts shall be drilled and epoxied in place.

SECTION C-C AT SLIDING PLATE

Not to Scale

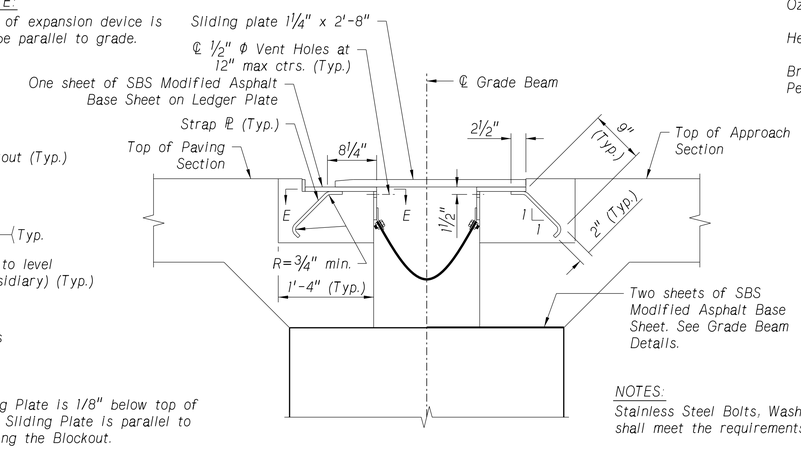

NOTES:

Stainless Steel Bolts, Washers and Nuts shall meet the requirements of ASTM A193.

The Drainage Trough along with the furnishing and installation of all Bolts, Washer, Nuts and Plates shall be subsidiary to the item "FINGER EXPANSION JOINT".

SECTION D-D AT SLIDING PLATE

Not to Scale

FINGER JOINT EXPANSION DEVICE NOTES:

Finger Joint shall be furnished in full length if possible. Joints between pieces if needed shall be located between fingers. Joint gap = 1/8"

Finger plate shall be cut with a machine guided gas torch. The surface of cut shall be perpendicular to the surface of plate. The cut shall not deviate more than 1/8" from the position of centerline of cut shown.

All welds shall be fillet welds, unless otherwise noted. All welding and weld qualification tests shall conform to the provisions of the current ANSI/AASHTO/AWS D1.5 Bridge Welding Code, referred to AWS Standard Specifications. The Contractor shall match filler metal to base metal in accordance with the AWS Standard Specifications.

Fabricator shall scribe lines in the top plates of the support assemblies to aid in aligning the joints during field erection. The lines shall be placed near the center and each end of an assembly section and be placed parallel to the centerline of the structure.

The expansion device, including plates for the drainage trough, shall be galvanized after welding according to ASTM A123.

The expansion device is to be parallel to grade.

The exposed surface of the Sliding Plate shall have a non-slip texture conforming at ASTM A786.

The minimum grade of structural steel for the expansion device shall be ASTM A709, Grade 50, unless otherwise noted. The Finger Plate and Sliding Plate shall meet Charpy Impact requirements for Temperature Zone 2.

The contract price bid for "FINGER EXPANSION JOINT" shall be full compensation for furnishing and installing the expansion joints. This work will consist of furnishing all labor and materials, including the finger plate assembly, sliding plate assembly, anchorage system, galvanized bolts with washer and nuts, plate washers, shims, neoprene trough connection plates, barrier rail slider plates and all its connections and anchorage system and the installation and adjustment of the expansion joints in accordance with the details shown in the plans and as directed by the engineer.

The 1" Φ bolts shall meet the requirements of ASTM F3125 Grade A325.

Concrete shall be forced under and around finger plate supporting hardware, studs, and bars. Proper consolidation shall be achieved by localized internal and external vibration.

DRAINAGE TROUGH NOTES:

Minimum splice length for Drainage Trough material shall be 2'-0". The Drainage Troughs shall utilize EPDM (Ethylene Propylene Diene Monomer) compounded elastomer conforming to the following minimum physical properties:

Property	Test Method	Specification
Color		Gray/Black
Specific Gravity	ASTM D 297	1.18+0.03
Tensile Strength	ASTM D 412	1400 psi
Elongation	ASTM D 412	300% min
Tear Resistance	ASTM D 624	125.6 lb/in min
Shore A Hardness (5 sec)	ASTM D 2240	60+10
Ozone Resistance	ASTM D 1149	(7 days/100pphm/40C, 50% Ext.) No Cracks
Heat Aging	ASTM D 573 (7 Days/116C (240F))	Ten. min 1200 psi Elongation min 210%
Brittleness Temperature	ASTM D 746	-59C (-75F)
Permeability, Water Vapor	ASTM E 96 Proc. BW	2.0 perm-mils

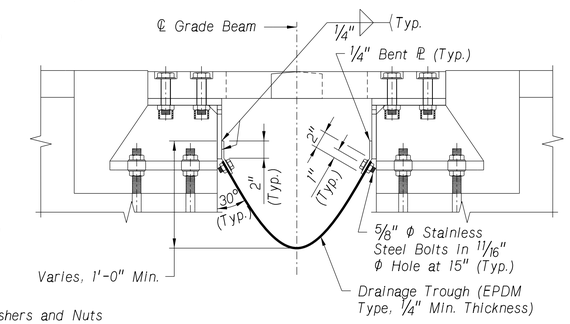

DRAINAGE TROUGH SECTION

Not to Scale

BURNS McDONNELL

PRELIMINARY PLAN
NOT FINAL - SUBJECT TO CHANGE

PROJECT NUMBER	SHEET NO.
NH-30-5(131)	S80

C.N. 31983
STRUCTURE NUMBER S030 37773L

BRIDGE ENGINEER

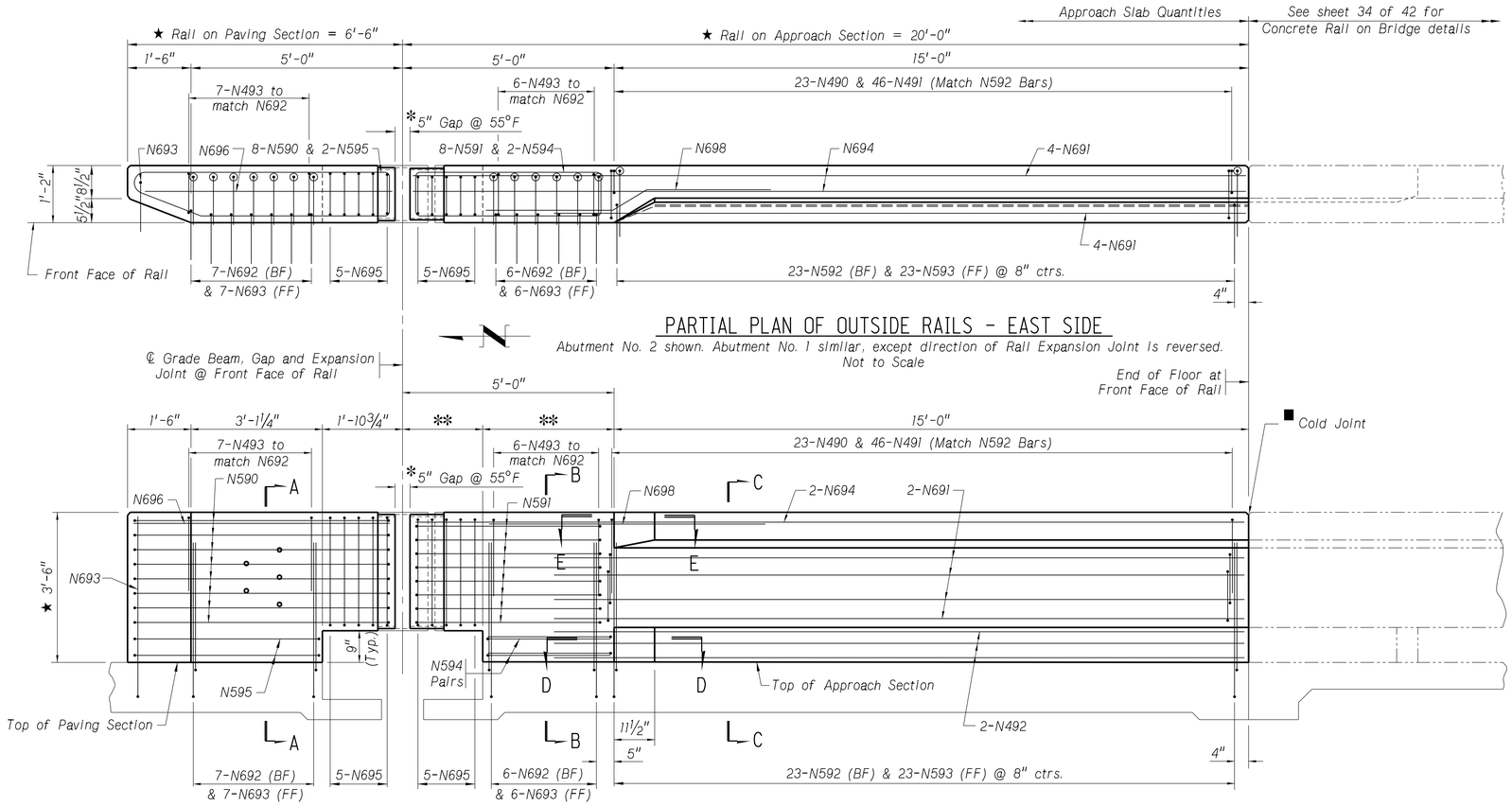

PARTIAL PLAN OF OUTSIDE RAILS - EAST SIDE

Abutment No. 2 shown. Abutment No. 1 similar, except direction of Rail Expansion Joint is reversed.
Not to Scale

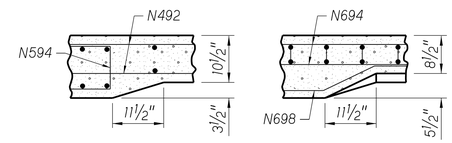

SECTION D-D

Not to Scale

SECTION E-E

At top of rail.
Not to Scale

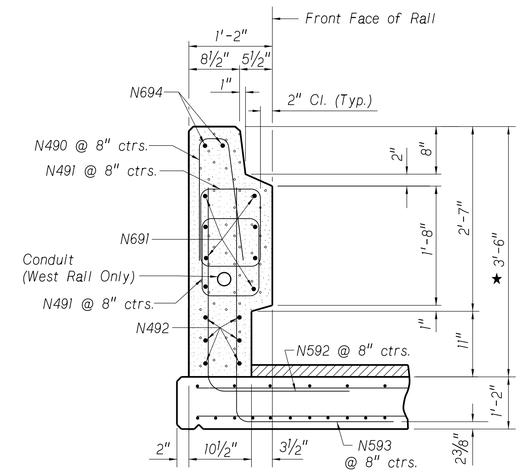

SECTION C-C

East Rail shown. West Rail similar
Not to Scale

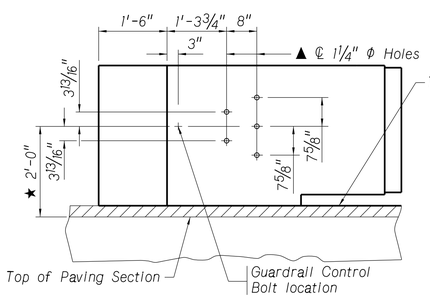

▲ As an alternate method, the contractor shall furnish and cast into the concrete an approved welded assembly consisting of threaded inserts, held accurately to the template of the holes shown. Inserts are to be complete with galvanized plate washers and galvanized ⅞"Φ x 2" cap screws. The insert assembly shall be a standard product of a reputable manufacturer of such items and be capable of resisting a shear load of 80,000 lbs.

THRIE BEAM TERMINAL CONNECTION DETAIL

East Rail Shown, West Rail Similar.
Not to Scale

PARTIAL ELEVATION OF CONCRETE RAILS - EAST SIDE

Abutment No. 2 shown. Abutment No. 1 similar, except direction of Rail Expansion Joint is reversed.
Not to Scale

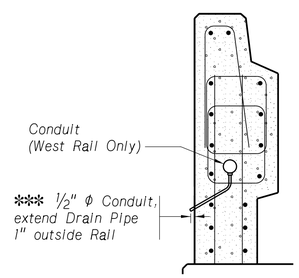

DRAIN PIPE DETAIL

Not to Scale

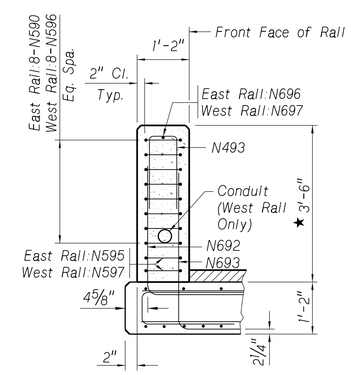

SECTION A-A

East Rail shown. West Rail similar.
Not to Scale

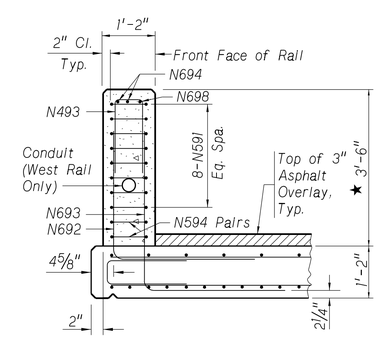

SECTION B-B

East Rail shown. West Rail similar.
Not to Scale

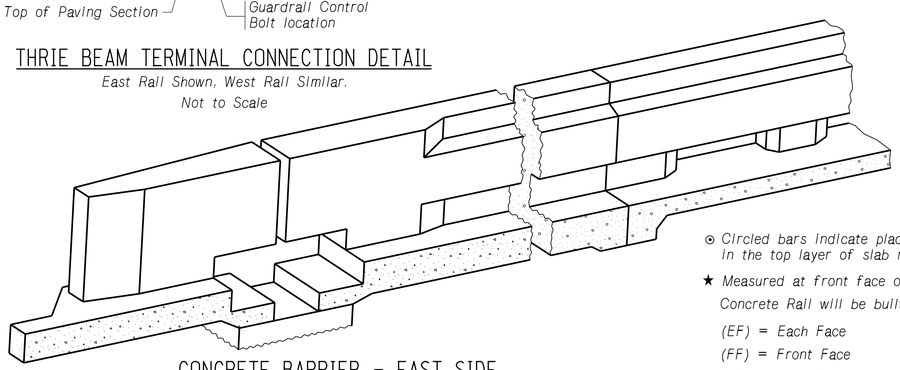

CONCRETE BARRIER - EAST SIDE

Not to Scale

NOTES

■ When pouring concrete rails, a mandatory chamfered cold joint must be formed at the end of floor.

For Rail Bill of Bars on Approach Slab see sheet 42 of 42.

Steel Forms are required.

* Decrease gap ¼" for every 5°F over 55°F.
Increase gap ¼" for every 5°F over 55°F.

** Dimension is temporature dependent. Set face of Rail blockout to match face of Approach Section blockout, and set Rail gap as indicated above.

*** Place drain at all low spots.

⊙ Circled bars indicate placement in the top layer of slab reinforcement.

★ Measured at front face of rail.

Concrete Rail will be built plumb.

(EF) = Each Face
(FF) = Front Face
(BF) = Back Face

BURNS McDONNELL

COUNTY PLATTE
HWY. NO. US 30
REF. POST. 377.73L
STA. 4094+22.09

LOCATION COLUMBUS SOUTH
SKEW 0°
ROADWAY 28'-0"
DESIGN LIVE LOAD HL-93

DESIGNED BY SDH
DETAILED BY TWM
CHECKED BY ASF
DATE JUL 2023

1,289'-10" 9-SPAN
WELDED PLATE GIRDER BRIDGE
RAIL ON APPROACH SLAB 1

NEBRASKA DEPARTMENT OF TRANSPORTATION - BRIDGE DIVISION

NEBRASKA
Good Life. Great Journey.
DEPARTMENT OF TRANSPORTATION

SPECIAL PLAN NO. 2

38 / 42

BRIDGE DIVISION.
Computer: B720560
User: nmfischer
Date: 07-JUL-2023 13:20
File: S030_37773L_CPG

PRELIMINARY PLAN
NOT FINAL - SUBJECT TO CHANGE

PROJECT NUMBER	SHEET NO.
NH-30-5(131)	S81

C.N. 31983
STRUCTURE NUMBER S030 37773L

BRIDGE ENGINEER

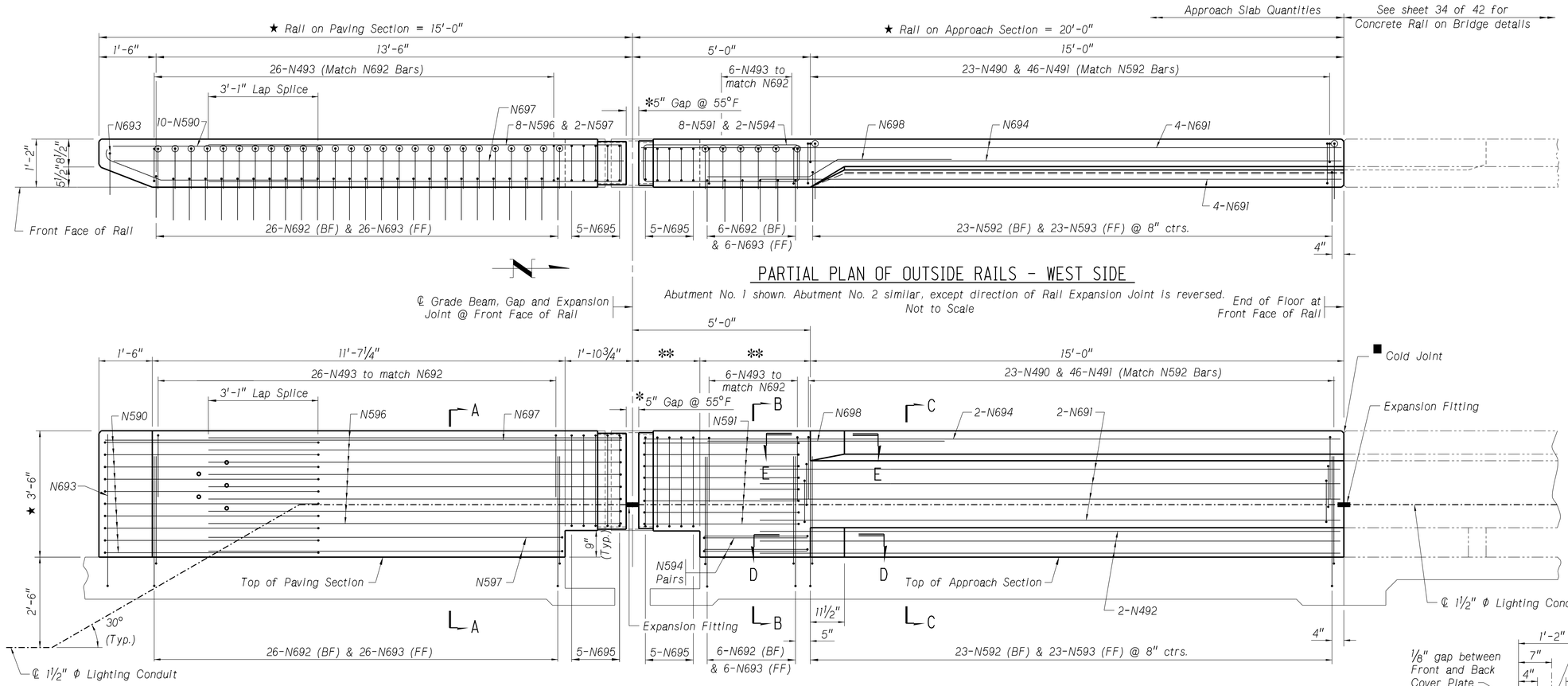

PARTIAL PLAN OF OUTSIDE RAILS - WEST SIDE

Abutment No. 1 shown. Abutment No. 2 similar, except direction of Rail Expansion Joint is reversed.
Not to Scale

PARTIAL ELEVATION OF CONCRETE RAILS - WEST SIDE

Abutment No. 1 shown. Abutment No. 2 similar, except direction of Rail Expansion Joint is reversed.
Not to Scale

RAIL EXPANSION JOINT NOTES

The minimum grade of structural steel for the Rail Expansion Joint Assembly shall be ASTM A709, Grade 50, unless otherwise noted.

The Rail Expansion Joint assembly and all associated hardware shall be galvanized after welding in accordance with the requirements of ASTM A123/A123M.

The flat head cap screws be stainless steel and shall meet the requirements of ASTM F879. Cap screws shall be countersunk ⅛" below top of plate.

Cost of furnishing and installing the Rail Expansion Joints shall be considered subsidiary to the contract bid price for "FINGER EXPANSION JOINT".

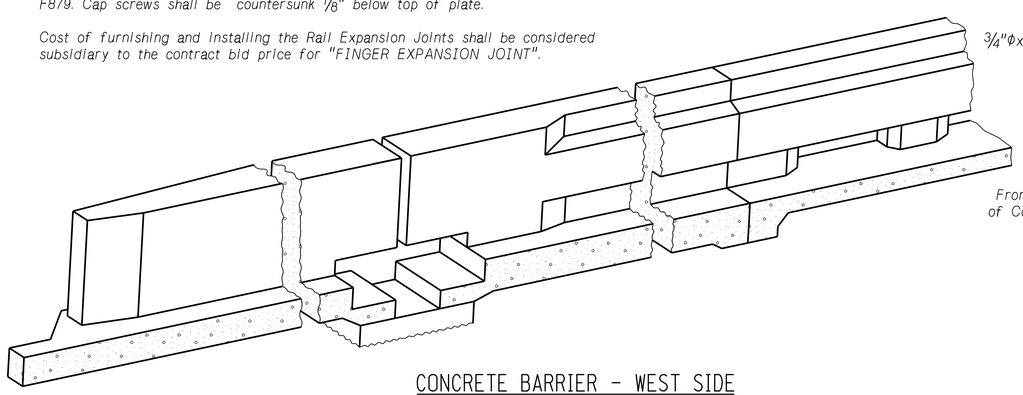

CONCRETE BARRIER - WEST SIDE

Not to Scale

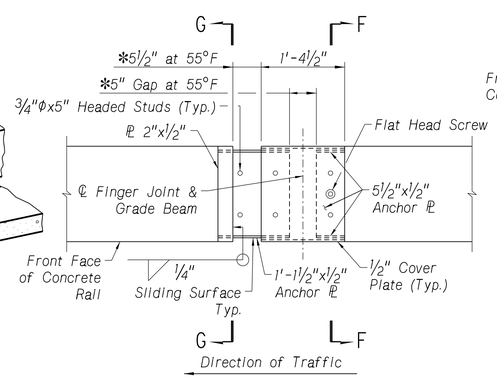

NOTE:
* Decrease gap ¼" for every 5°F over 55°F
Increase gap ¼" for every 5°F under 55°F

PLAN OF RAIL EXPANSION JOINT

Not to Scale

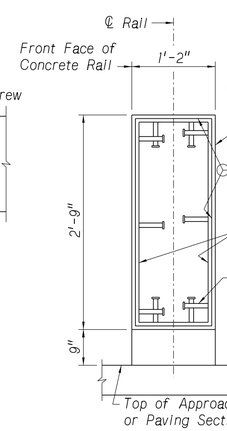

SECTION G-G

Not to Scale

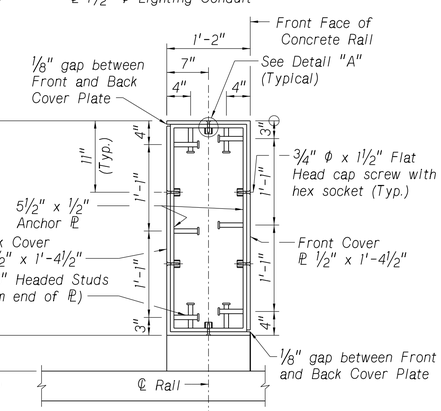

SECTION F-F

Not to Scale

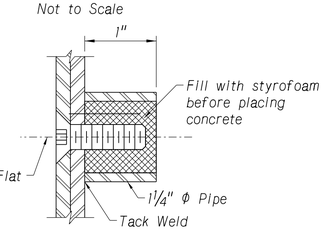

DETAIL A

Not to Scale

BURNS McDONNELL

LOCATION COLUMBUS SOUTH
SKEW 0°
ROADWAY 28'-0"
DESIGN LIVE LOAD HL-93
DETAILED BY TWM
CHECKED BY ASF
DATE JUL 2023
DESIGNED BY SDH

COUNTY PLATTE
HWY. NO. US 30
REF. POST. 377.73L
STA. 409+22.09

1,289'-10" 9-SPAN
WELDED PLATE GIRDER BRIDGE
RAIL ON APPROACH SLAB 2

NEBRASKA DEPARTMENT OF TRANSPORTATION - BRIDGE DIVISION

NEBRASKA
Good Life. Great Journey.
DEPARTMENT OF TRANSPORTATION

SPECIAL PLAN NO. 2

BRIDGE DIVISION.
Computer: B720560
User: nmfischer
Date: 07-JUL-2023 13:21
File: S030_37773L_CPG

PRELIMINARY PLAN
NOT FINAL - SUBJECT TO CHANGE

PROJECT NUMBER	SHEET NO.
NH-30-5(131)	S82

C.N. 31983
STRUCTURE NUMBER S030 37773L

BRIDGE ENGINEER

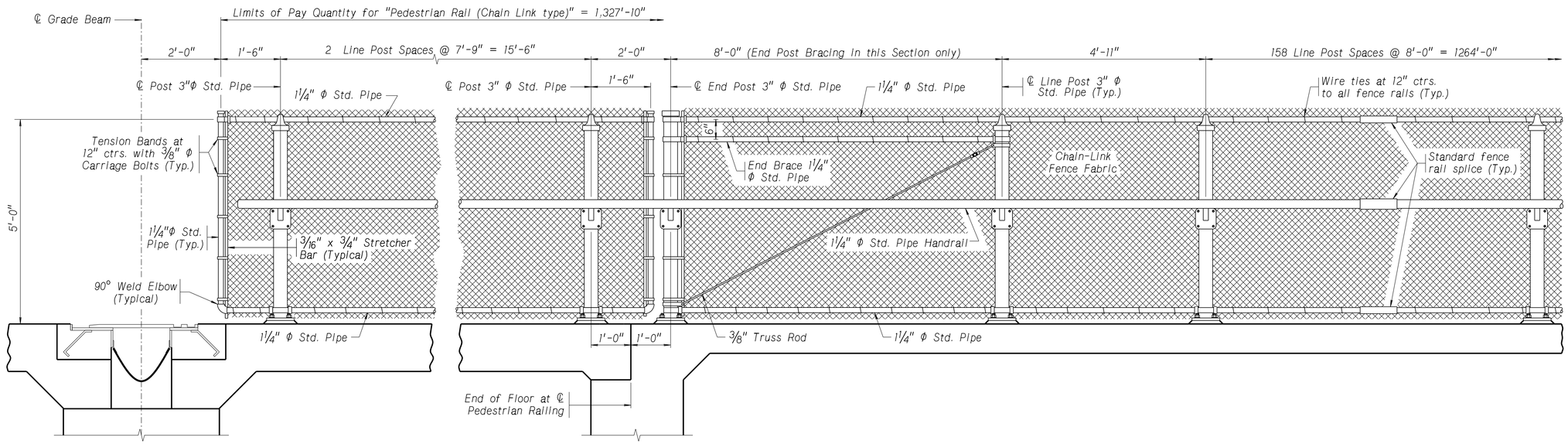

ELEVATION OF PEDESTRIAN RAIL

Post spacing at Abutment 1 shown. Abutment 2 similar.
Not to Scale

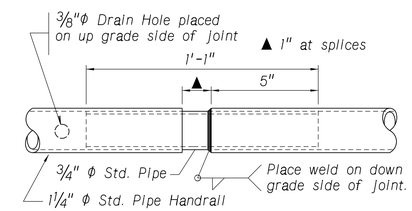

EXPANSION JOINT AND SPLICE DETAIL

For expansion joints and splices in handrail and fence rails.
(Plan View)

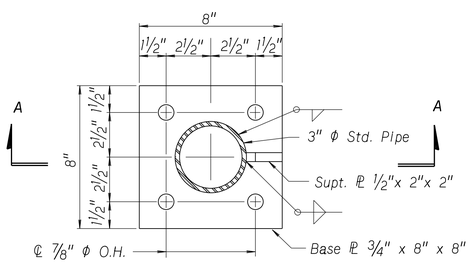

BASE PLATE PLAN VIEW

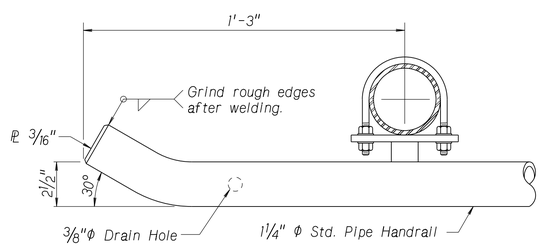

END OF HANDRAIL DETAIL

NOTES

All standard pipe sizes indicate Nominal Pipe Sizes (NPS). NPS does not refer to the actual inside or outside diameter of the pipe.

Fence and handrail layout shall conform to vertical alignment of the bridge. Fence posts shall be set plumb. All nuts shall be placed on the outside of the fence. Peen ⅜" bolts.

Handrail and fence rails must have expansion joints placed at each pier and abutment. Handrail shall have a minimum length of 20'-0" between splices. Handrail splices shall be placed 12" from ℄ of Line Posts. See Detail.

Chain-Link fence and handrail will be galvanized and conform to the requirements of Section 1064 of the Standard Specifications. The height of the fabric shall be 5'-0". Knuckled selvage shall be provided at the top and bottom.

3" Φ Std. Pipe = 3½" O.D.
1¼" Φ Std. Pipe = 1 11/16" O.D.
¾" Φ Std. Pipe = 1 1/16" O.D.

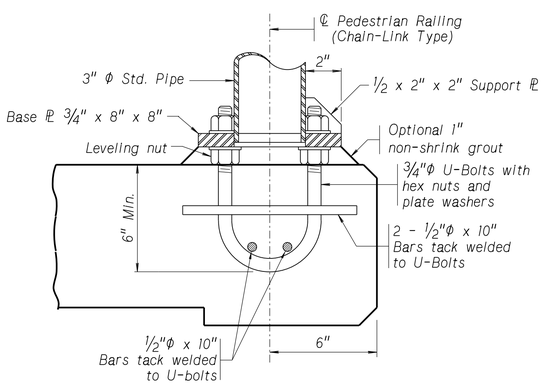

SECTION A-A

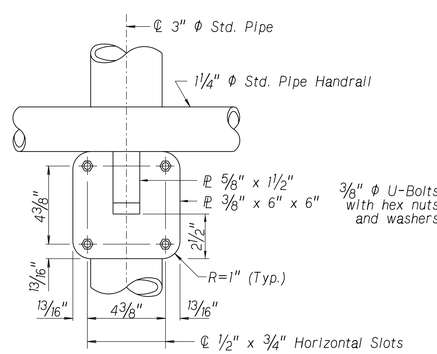

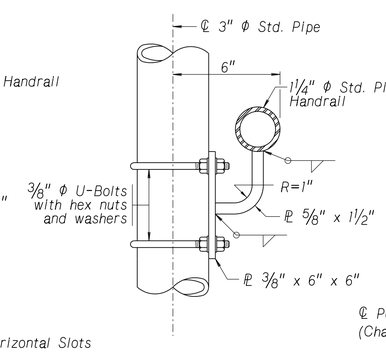

HANDRAIL BRACKET DETAILS

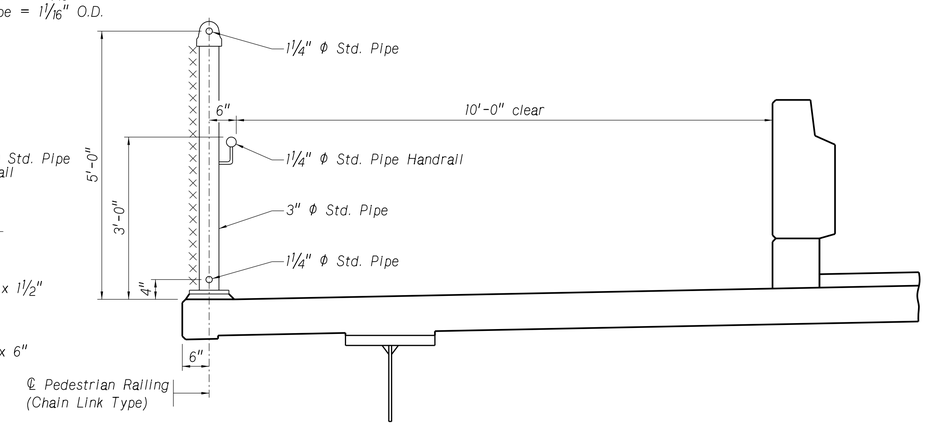

TYPICAL SECTION THRU FENCE

BURNS McDONNELL

1,289'-10" 9-SPAN
WELDED PLATE GIRDER BRIDGE
PEDESTRIAN RAILING (CHAIN LINK TYPE)

COUNTY PLATTE
HWY. NO. US 30
REF. POST. 377.73L
STA. 409+22.09
LOCATION COLUMBUS SOUTH
SKEW 0°
ROADWAY 28'-0"
DESIGN LIVE LOAD HL-93
DESIGNED BY ASF
DETAILED BY TWM
CHECKED BY SDH
DATE JUL 2023

NEBRASKA
Good Life. Great Journey.
DEPARTMENT OF TRANSPORTATION

NEBRASKA DEPARTMENT OF TRANSPORTATION - BRIDGE DIVISION

SPECIAL PLAN NO. 2

BRIDGE DIVISION.
File: S030_37773L_CPG Computer: B120560 User: nmfischer Date: 07-JUL-2023 13:21

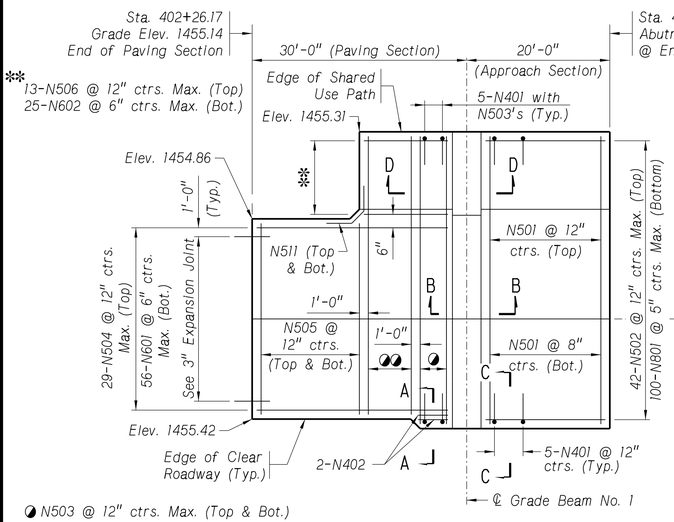

APPROACH SLAB NO. 1
SHOWING REINFORCING

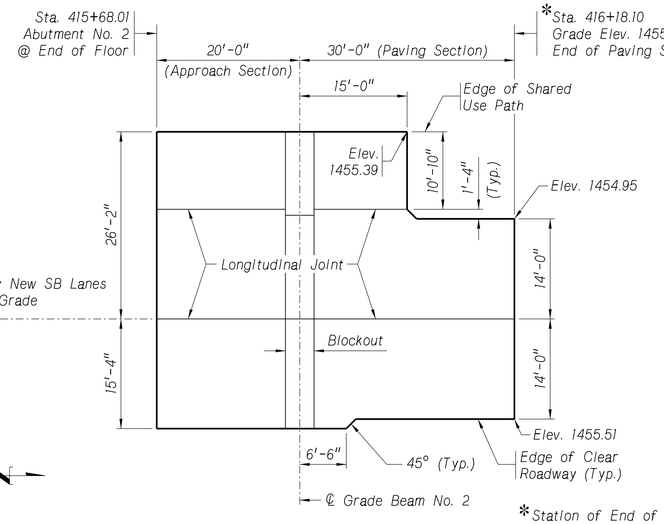

APPROACH SLAB NO. 2
SHOWING DIMENSIONS

*Station of End of Paving Section at ℄ Roadway New SB Lanes. Alignment deflects at P.I. Sta. 416+11.59

GENERAL PLAN OF APPROACH SLABS

Not to Scale

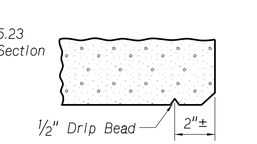

DRIP BEAD DETAIL

Not to Scale

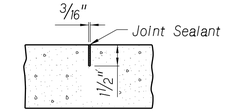

LONGITUDINAL JOINT

Not to Scale

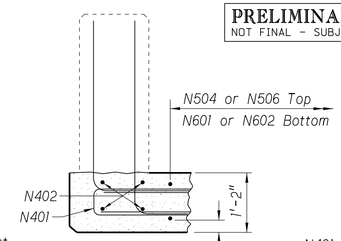

SECTION A-A

Not to Scale
Typical

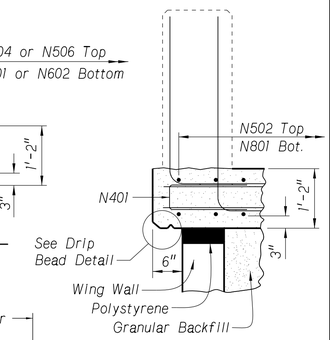

SECTION C-C

Not to Scale
Typical

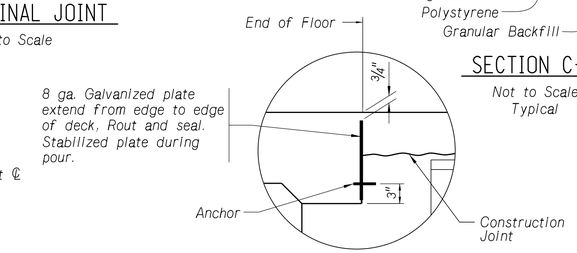

ALTERNATE JOINT DETAIL AT END OF FLOOR

To be used if approach slab is poured continuous with bridge deck.

Length of N502 and N801 in Bill of Bars established based on maximum length of Approach Section due to temperature movement. Trim bars as needed to maintain 3" clearance at End of Floor at time of Approach Section pour.

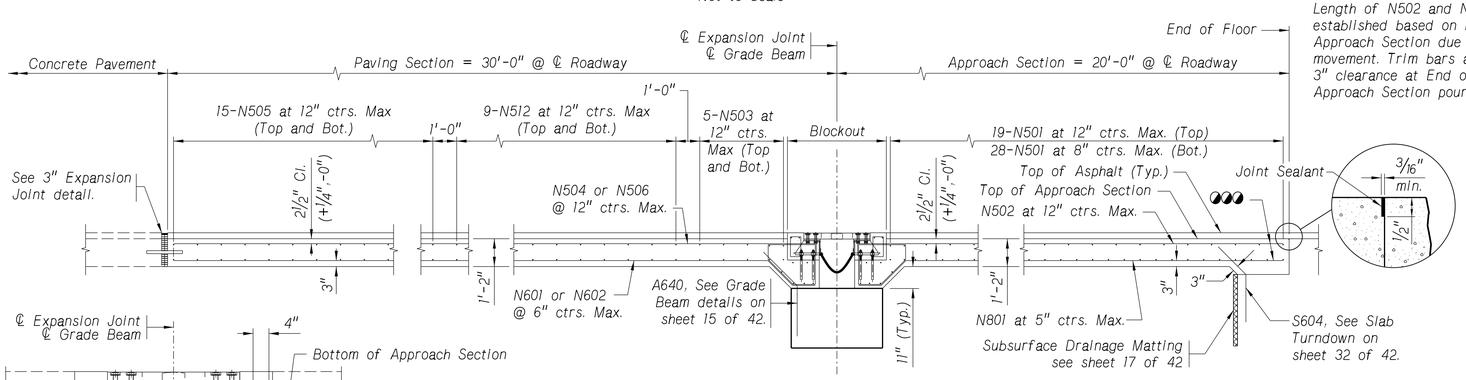

LONGITUDINAL SECTION

Not to Scale

APPROACH SLAB NOTES:

Concrete Rail Width = 1'-2". See sheet 34, 38, & 39 of 42 for placement of rail reinforcement.

See Standard Specifications for tining and finishing of approach slabs.

SBS MODIFIED ASPHALT base sheets and all other miscellaneous items shall be considered subsidiary to the pay item, CONCRETE FOR PAVEMENT APPROACHES CLASS 47BD-4000.

SBS MODIFIED ASPHALT base sheets shall be modified bitumen roofing material, with a minimum thickness of 0.090 inch and a minimum weight of 60 lbs. per 100 sq. feet.

LONGITUDINAL JOINTS shall be 1½" deep and placed in the paving and approach slabs in accordance with section 603.03 paragraph 8 of the Standard Specifications. Contractor shall exercise care not to damage reinforcing steel placed in the top layer of the slabs.

The expansion gap between approach section and paving section shall be cleaned of all foreign matter before the installation of the expansion device or the filler material.

Block out approach section haunch as required at wingwalls. Provide 4" preformed joint filler between approach section and vertical face of wingwall, see detail.

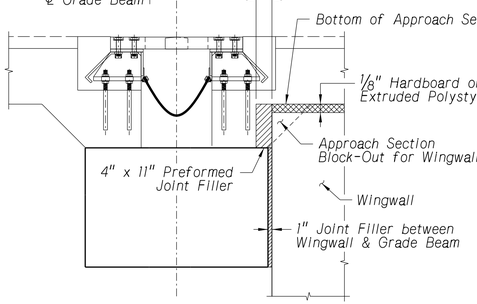

APPROACH SECTION BLOCK-OUT DETAIL AT WINGWALLS

Not to Scale

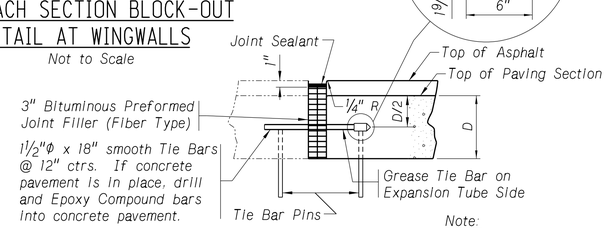

Note:
Use D/2 of Roadway Pavement if less than D/2 of Paving Section.

3" EXPANSION JOINT

Not to Scale

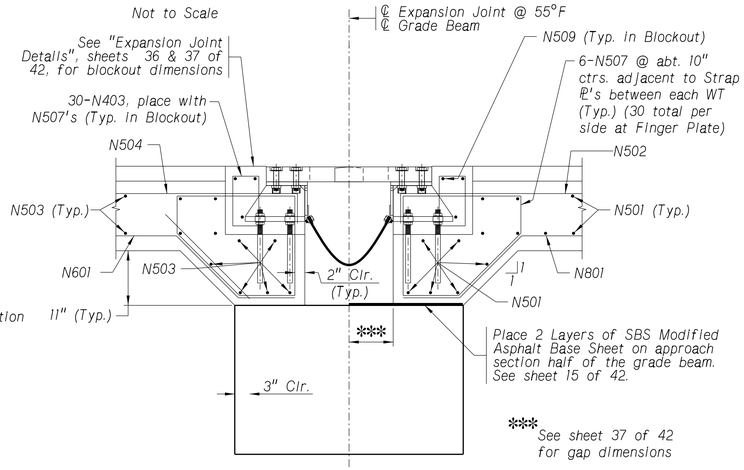

SECTION B-B AT FINGER PLATE

Not to Scale

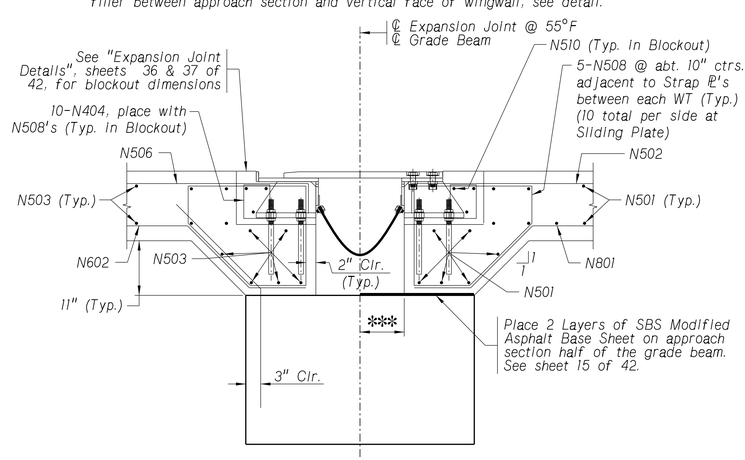

SECTION D-D AT SLIDING PLATE

Not to Scale

BURNS McDONNELL

BILL OF BARS

	MARK	NUMBER	LENGTH	TYPE	"A"	"B"	"C"	"D"	"E"	"F"	PIN	HOOK	WEIGHT LB
APPROACH SLAB NO. 1 (APPROACH SLAB NO. 2 IS IDENTICAL)	N801	100	19'-5"	117	1'-5"	0'-9⅞"	1'-0"	17'-2⅜"			3¾"		5,184
	N601	56	29'-2"	117	1'-5"	0'-9⅞"	1'-0"	26'-11"			3¾"		2,453
	N602	25	14'-2"	117	1'-5"	0'-9⅞"	1'-0"	11'-11"			3¾"		532
	N501	53	41'-0"	STR									2,266
	N502	42	19'-8"	104	0'-6"	19'-2"					3¾"		862
	N503	16	41'-0"	STR									684
	N504	29	29'-5"	104	0'-6"	28'-11"					3¾"		890
	N505	30	27'-6"	STR									860
	N506	13	14'-5"	104	0'-6"	13'-11"					3¾"		195
	N507	60	7'-3"	121	1'-8"	1'-9⅞"	0'-7½"	1'-5¾"	0'-9"		2½"	5½"	454
	N508	20	7'-3"	121	1'-8"	1'-9⅞"	0'-7½"	1'-5¾"	0'-9"		2½"	5½"	151
	N509	6	29'-5"	STR									184
	N510	6	11'-0"	STR									69
	N511	2	5'-9"	106	1'-10"	2'-1"	1'-3½"	1'-3½"	1'-10"		3¾"		12
	N512	18	39'-8"	STR									745
	N401	20	6'-7"	103	3'-0"	0'-6½"	3'-0"				2"		88
	N402	4	4'-1"	STR									11
	N403	60	3'-3"	107	0'-9½"	0'-5¼"					2"	4½"	130
	N404	20	2'-9"	107	0'-6½"	0'-5¼"					2"	4½"	37
	SUBTOTAL FOR APPROACH SLAB NO. 1 =												15,807 LB
	SUBTOTAL FOR APPROACH SLAB NO. 2 =												15,807 LB
RAIL ON APPROACH SLAB NO. 1 (RAIL ON APPROACH SLAB NO. 2 IS IDENTICAL)	N691	16	17'-7"	STR									423
	N692	45	6'-4"	104	3'-2"	3'-2"					4½"		428
	N693	47	7'-8"	104	3'-10"	3'-10"					4½"		541
	N694	4	19'-3"	STR									116
	N695	20	7'-6"	107	2'-5"	0'-8"					4½"	8"	225
	N696	1	5'-11"	STR									9
	N697	1	14'-5"	STR									22
	N698	2	7'-1"	117	1'-0¾"	3'-0"	0'-11½"	3'-0"			4½"		21
	N590	18	14'-2"	130	4'-6¼"	0'-10"	5'-11¼"	0'-5"	1'-6"	1'-5"	2½"	5½"	266
	N591	16	11'-5"	107	4'-5"	0'-10"					2½"	5½"	191
	N592	46	5'-0"	104	2'-6"	2'-6"					3¾"		240
	N593	46	6'-0"	104	3'-0"	3'-0"					3¾"		288
	N594	8	6'-2"	103	2'-8"	0'-10"	2'-8"				2½"		51
	N595	2	10'-10"	130	2'-10¼"	0'-10"	4'-3¼"	0'-5"	1'-6"	1'-5"	2½"	5½"	23
	N596	8	24'-0"	103	11'-7"	0'-10"	11'-7"				2½"		200
	N597	2	20'-8"	103	9'-11"	0'-10"	9'-11"				2½"		43
	N490	46	4'-4"	131	2'-0"	0'-4"	2'-0"	0'-3"			2"		133
	N491	92	4'-7"	107	1'-1"	0'-10"					2"	4½"	282
	N492	12	17'-7"	STR									141
	N493	45	5'-5"	103	2'-4"	0'-8¾"	2'-4"				2"		163
	SUBTOTAL FOR RAIL ON APPROACH SLAB NO. 1 =												3,806 LB
	SUBTOTAL FOR RAIL ON APPROACH SLAB NO. 2 =												3,806 LB
	TOTAL =												39,226 LB

BAR MARK

A413 — A 4 13

- 13: BAR NUMBER:
  01 THRU 49, GENERAL REINFORCING
  70 THRU 79, LIGHT POLE REINFORCING
  90 THRU 99, CURB OR RAIL REINFORCING
- 4: BAR SIZE
- A: TYPE OF BRIDGE ELEMENT - A=ABUTMENT (P=PIER, B=BENT, S=SLAB, N=APPROACH SLAB)

BAR SETS

MARK	MAX. LENGTH	MIN. LENGTH	NO. OF SETS	BARS PER SET

STANDARD HOOK LENGTH

PRIMARY STRESS BARS			STIRRUPS & TIES		
BAR SIZE	HOOK H 90°	HOOK H 180°	BAR SIZE	HOOK H 90°	HOOK H 135°
4	8"	6"	3	4"	4"
5	10"	7"	4	4½"	4½"
6	12"	8"	5	6"	5½"
7	15"	10"	6	12"	8"
8	17"	11"	7	14"	9"
9	19"	15"	8	16"	10½"
10	23"	17"			
11	24"	19"			

d = BAR SIZE
Dp = PIN DIAMETER

PIN DIAMETER

PRIMARY STRESS		STIRRUPS & TIES	
BAR SIZE	Dp	BAR SIZE	Dp
4	3"	3	1½"
5	3¾"	4	2"
6	4½"	5	2½"
7	5¼"	6	4½"
8	6"	7	5¼"
9	9½"	8	6"
10	11"		
11	12"		

BENDING DIAGRAMS

ALL DIMENSIONS ARE OUT TO OUT & NOT TO SCALE
ALL REINFORCING STEEL SHALL BE EPOXY COATED

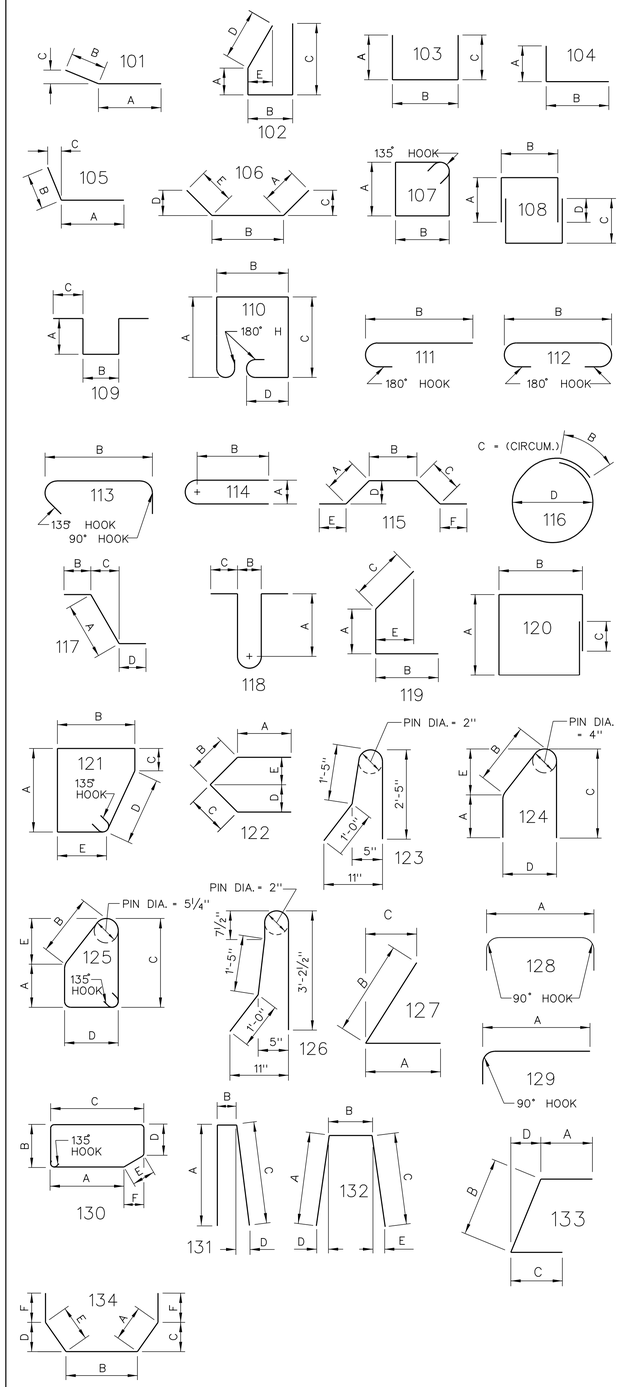

PRELIMINARY PLAN
NOT FINAL - SUBJECT TO CHANGE

BURNS McDONNELL

PROJECT NUMBER	SHEET NO.
NH-30-5(131)	S84

C.N. 31983
STRUCTURE NUMBER S030 37773L

BRIDGE ENGINEER

1,289'-10" 9-SPAN
WELDED PLATE GIRDER BRIDGE
APPROACH SLAB & RAIL BILL OF BARS

LOCATION COLUMBUS SOUTH
SKEW 0°
ROADWAY 28'-0"
DESIGN LIVE LOAD HL-93
DATE JUL 2023
CHECKED BY SDH
DETAILED BY TWM
DESIGNED BY ASF

COUNTY PLATTE
HWY. NO. US 30
REF. POST. 377.73L
STA. 409+22.09

NEBRASKA DEPARTMENT OF TRANSPORTATION - BRIDGE DIVISION

NEBRASKA
Good Life. Great Journey.
DEPARTMENT OF TRANSPORTATION

SPECIAL PLAN NO. 2

BRIDGE DIVISION.
Computer: B713227
User: asferdon
Date: 10-JUL-2023 21:53
File: S030_37773L_CPG